Specifications of Suntex 8-241 conductivity sensor
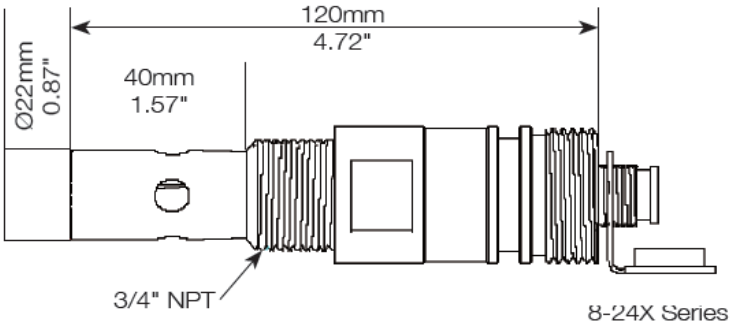
- Order No.:8-241
- Type: 4-electrode sensor
- Range: 10.00μS~500.0mS
- Working temp.: 0~80° C
- Pressure range at 25°C(77°F): 0~7 bar
- Electrode Material: Titanium, CPVC
- Body Material: CPVC
- Temperature sensor: NTC 30K
- Cell constant: 0.5 cm^{-1}
- Process connection: 3/4″ NPT
- Insertion length: 40mm
- Max. length: 120mm
- Compatible cable length: 5m, 10m, 20m, 30m