EC-4310
Intelligent Conductivity Transmitter

Operation Manual

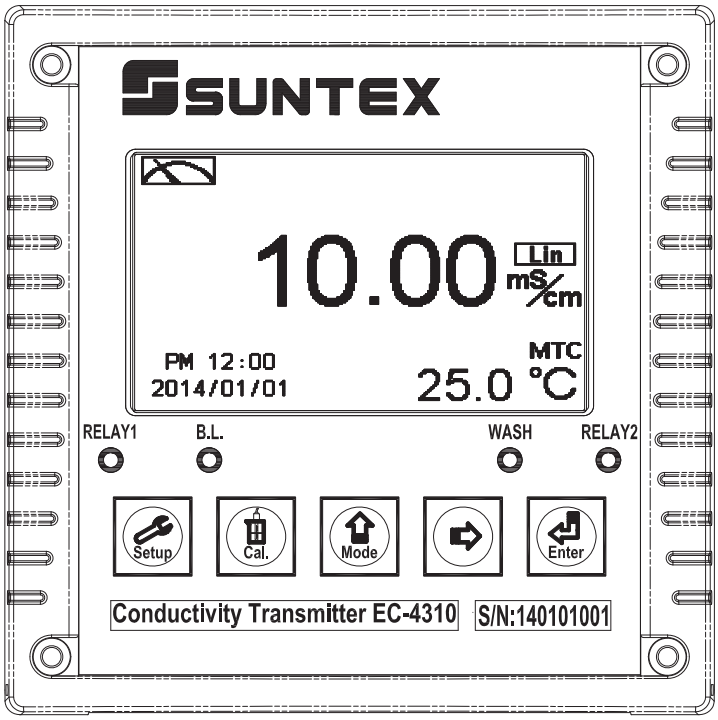

SUNTEX

CONTENTS

Precautions for installation

Brief Instruction 1
1. Specifications 4
2. Assembly and installation
2.1 Transmitter installation 5
2.2 Illustration of panel mounting 5
2.3 Illustration of Wall mounting and pipe mounting 6
3. Overview of conductivity transmitter EC-4310
3.1 Illustration of rear panel 7
3.2 Illustration of terminal function 7
3.3 Description of terminal function 8
3.4 Wiring of cable 9
3.5 Circuit of cable 9
3.6 Illustration of electrical connection 10
3.7 Online EC/RC pipe system(Optional) 11
4. Configuration
4.1 Illustration of front panel 12
4.2 Keypad 12
4.3 LED indicators 12
4.4 Display 13
5. Operation
5.1 Measurement mode 14
5.2 Set-up menu 14
5.3 Calibration menu 14
5.4 Shortcuts 14
5.5 Default value 14
6. Settings
Block diagram of settings 15
6.1 Entry of set-up menu 17
6.2 Security code of settings(Code) 18
6.3 Language 19
6.4 Mode 20
6.5 Product Adjustment 21
6.6 Temperature 22
6.7 Temperature Compensation Coefficient 23
6.8 Relay 1 24
6.9 Relay 2 25

6.10 Wash time(Clean) 26
6.11 Analog output 1 27
6.12 Analog output 2 (Temperature) 28
6.13 Date/Time (Clock) 29
6.14 Sample average of measurements (Digital filter) 30
6.15 Backlight settings 31
6.16 Contrast settings 32
6.17 Power frequency (Freq.) 33
6.18 Automatically back to measurement mode(Return) 34
7. Calibration
Block diagram of Calibration 35
7.1 Entry of calibration menu 36
7.2 Security password of calibration 37
7.3 Cell constant calibration 38
7.4 Standard solution calibration (Std. Solution) 40
7.5 Automatically back to measurement mode(Return) 41
8. Error messages (Error code) 42
9. Installation of cells
9.1 Appearance of cells 43
9.2 Correct installation 44
9.3 Incorrect installation 44
Appendix 45

Thank you for purchasing Suntex products. In order to continually improve and enhance the transmitter's function, Suntex reserves the right to modify the content and icon display of the product. The actual situation is subject to the instrument without notice. The operation manual is only provided for function and installation description, Suntex Instruments Co., Ltd. is not liable for any person or entity for any direct or indirect loss or damage due to improper usage of this product. If you have any questions or find omission, negligence or mistakes of the operation manual, please contact with our staff, thank you.

Precautions for installation

Wrong wiring will lead to breakdown or electrical shock of the instrument, please read this operation manual clearly before installation.

- Make sure to remove AC power from the transmitter before wiring input, output connections, and remove it before opening the transmitter's housing.
- The installation site of the transmitter should be good in ventilation and avoid direct sunshine.
- The material of signal cable should be special coaxial cable. Strongly recommend using our coaxial cable. Do not use normal wires instead.
- Avoid electrical surge when using power. Especially when using three-phase power, use ground wire correctly. If the power surges interference occurs, separate the power supply of transmitter from the control device, such as: dosing machines, mixers, etc. to make individual power supply for the transmitter; or set surge absorber to reduce the power surges at all electromagnetic switches and power control device coils.
- The internal relay contact of the instruments is for alarm or control function. Due to safety, **please must connect to external relays which can stand enough ampere to make sure the safety operation of the instrument.**（Please refer to chapter 3.6 "Illustration of electrical connection"）
- There a manufacturer logo usually shows in the display of transmitter, and the illustration of each function in the manual is no longer expressed.

Brief Instruction

Description of set-up settings (see chapter 6 for details)

Press Setup and Mode simultaneously to see the overview of the set-up settings now. Then press Enter if you would like to modify set-up settings. Press keypad according to index of keypad on the screen.

Index of keypad

keypad	Accordingly item	Description
Setup	SET:Back	Back to upper layer
Mode	▲: ◢	Choose leftward of change to left page
	▲: +	Increase digit
⇨	▶: ◢	Choose rightward of change to right page
	▶: —	Decrease digit
Enter	ENT: Enter	Confirm settings after modifications and then go through next step

Selection of set-up items

keypad	Accordingly item	Description
Mode		Measurement mode, to choose Conductivity (Cond), Resistivity (Res), Total Dissolved Solids (TDS) or Salinity measurement
Product Adj.		Sample reading adjustment—for resistivity mode only.
Temperature	℃	Temperature measurement and compensation, including MTC, PTC100Ω, PTC1KΩ, NTC (4 types total). MTC---Manual temperature compensation, PTC100Ω/PTC1KΩ/NTC--- auto temperature compensation
Compensation	out non-linear linear in	Temperature compensation setting, selection from linear(Lin.), non-linear(Non-Lin.), no compensation(Lin., 0.0%), 3 types
Relay 1	1	First relay setting, to choose action off or Hi/Lo alarm
Relay 2	2	Second relay setting, to choose action off or Hi/Lo alarm

Clean		Automatic wash time setting, to choose electrode clean equipment’s ON and OFF duration
Analog 1		Current output according to Res, Cond., TDS or Sal. setting range
Analog 2		Current output according to temperature setting range
Clock		Clock setting **(When out of power and reboot it, the instrument’s time setting will return to the factory pre-setting)**
Digital Filter		Take every serial 1~60 measurements, average them continuously, and make it as the readings
Black-light		Backlight setting, to set Auto/ON/OFF backlight, brightness, and sensitivity
Contrast		Contrast of screen setting
Frequency		Power frequency setting
Return		Setting of returning to the measurement mode
Code		Security code of set-up mode. The set-up code is precedential to calibration code, thus it can pass a different security code of calibration.
Language		Available for English, Traditional Chinese, Simplified Chinese

Description of calibration settings (see chapter 7 for details)

Press [Cal.] and [Mode] simultaneously to see the last calibration information. Then press [Enter] if you would like to make a new calibration or modify setting of calibration. Press keypad according to index of keypad on the screen.

Index of keypad:

keypad	Accordingly item	Description
Cal.	CAL:Back	Back to upper layer
Mode	▲: ◢	Choose leftward of change to left page
	▲: +	Increase digit
⇨	▶: ◣	Choose rightward of change to right page
	▶: −	Decrease digit
Enter	ENT: Enter	Confirm settings after modifications and then go through next step

Selection of calibration items

keypad	Accordingly item	Description
Cell Constant	C=0.0102	To adjust the instrument cell constant setting until the value the same with the given cell constant of the sensor
Std. Solution	Standard Solution	Use the appropriate standard solution to calibrate the system
Return		Time interval setting of returning to the measurement mode
Code		Security code of calibration mode.

Note

Due to the need for continuous improvement of the transmitter function, we reserve the right to modify the content and the icon of the function. The actual icons and contents are subject to the instrument without notice.

1. Specifications

Model		EC-4310
Measuring modes		Resistivity/Conductivity/TDS/Salinity/Temp.
Ranges	Resistivity	0.00 MΩ·cm~20.00 MΩ·cm
	Conductivity	0.000 μS/cm~2000 mS/cm (depends on selected sensor)in 7 ranges; Auto or Fixed
	Salinity	0.0ppt~70.0ppt (according to IOT)
	TDS	0ppm~19999ppm；0.00~199.99 ppt
	Temp.	PT-1000/PT-100 -30.0~200.0℃，NTC30K: -30.0~130.0℃
Resolutions	Resistivity	0.01 MΩ·cm
	Conductivity	0.001 / 0.01 / 0.1 / 1 μS/cm, 0.01 / 0.1 / 1 mS/cm
	Temp.	0.1˚C
Accuracy	Resistivity	±1% (± 1 Digit)
	Conductivity	±1% (± 1 Digit)
	Temp.	±0.2°C (± 1 Digit), (excluding two-wiring PT100) Equipped with temperature error correction function
Temperature Compensation		Automatic with NTC 30KΩ / PT-1000 /PT-100
		Manual adjustment
Calibration mode		(1) Manual cell-constant adjustment (2) Conductivity standard solution calibration
Ambient Temp.		0~50 ˚C
Storage Temp.		-20~70 ˚C
Cell Constant		0.01, 0.05, 0.1, 0.5, 10.00 cm^{-1} fixed,freely selectable 0.0080~19.99 cm^{-1}
Temperature Coefficient		Linear temperature compensation at 0.00%~ 40.00%, Non-Linear compensation for pure water, and Off-compensation
Display		Large LCM with auto-sense backlight and contrast function
		Text mode
Language		Available for English, Traditional Chinese, Simplified Chinese
Analog output 1		Isolated DC 0/4~20mA corresponding to measurement, max. load 500Ω
Analog output 2		Isolated DC 0/4~20mA corresponding to Temp., max. load 500Ω
Settings	Contact	240VAC, 0.5A max. (recommend)
	Activate	Hi/Lo. Hi/Hi. Lo/Lo selectable two limited programmable, ON/OFF
Wash	Contact	240VAC, 0.5A max. (recommend)
	Time	ON 0~99min. 59sec. / OFF 0~999hr 59min
Power Supply		100V~240VAC±10%, 7W Max., 50/60Hz
Installation		Wall or Pipe or Panel Mounting
Dimensions		144m × 144mm × 115mm (H×W×D)
Cut out Dimensions		138 mm × 138 mm (H×W)
Weight		0.8Kg
ptotection		IP 65 (NEMA 4X)

Note: The specifications and appearance of the instrument are subject to change without notice.

2. Assembly and installation

2.1 Transmitter installation:

This Transmitter can be installed through panel mounting, wall mounting and 2” pipe mounting.

Installation of panel mounting:

First, prepare a square hole of 138 x 138mm on the panel box, and then insert the transmitter directly into the panel box. Insert the accessorial mounting bracket from the rear, and make it be fixed into pickup groove.

2.2 Illustration of panel mounting

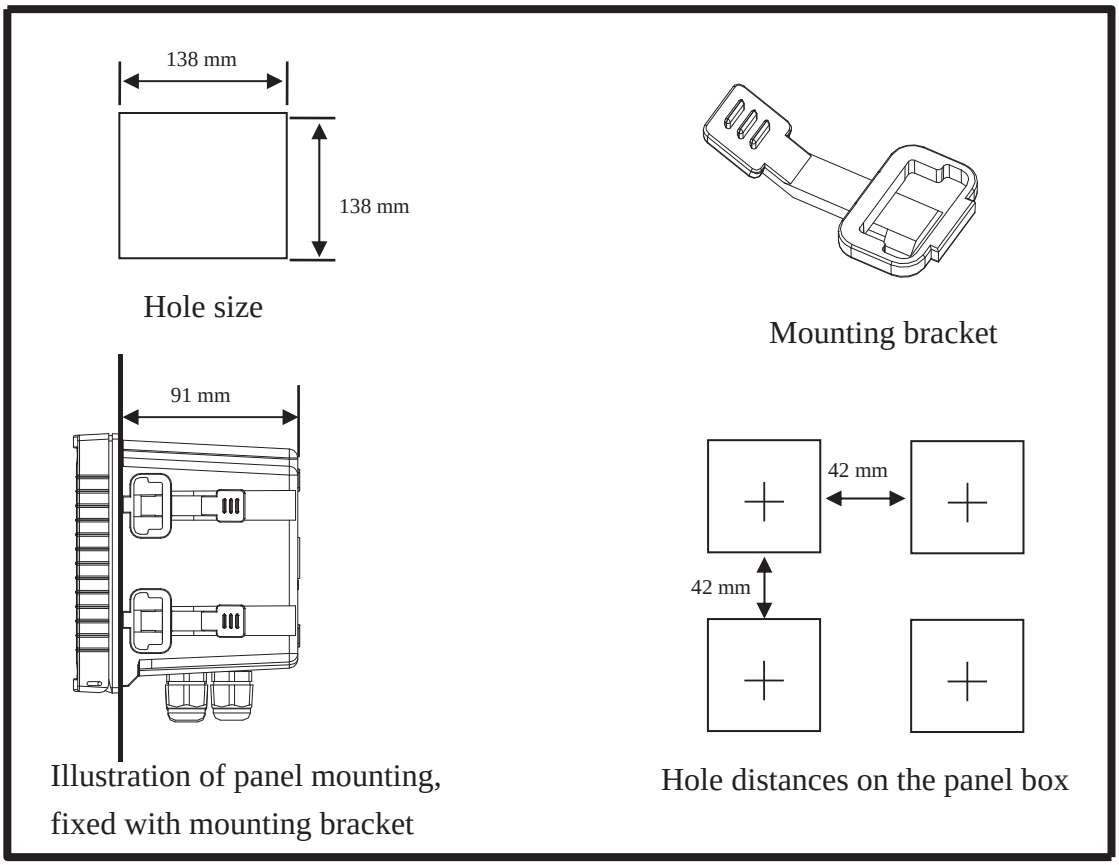

2.3 Illustration of wall mounting and pipe mounting

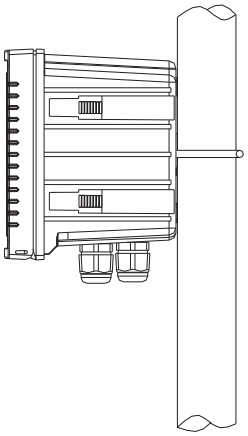

Installation of pipe mounting
Fixed with U-shaped pipe clamp.
(Optional, Order Number: 8-34)

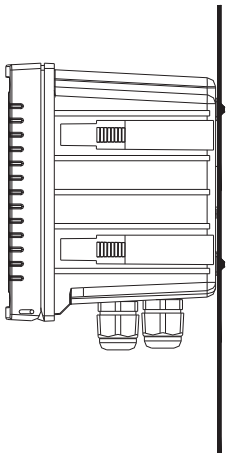

Installation of wall mounting
Fixed with 4 x M5 screws

Penetrate the two prepared holes in the rear cover and fix the U-shaped pipe clip, and then install two waterproof squeezed caps (the transmitter's standard accessory kit) into the holes from inner rear cover to prevent from the water vapor.

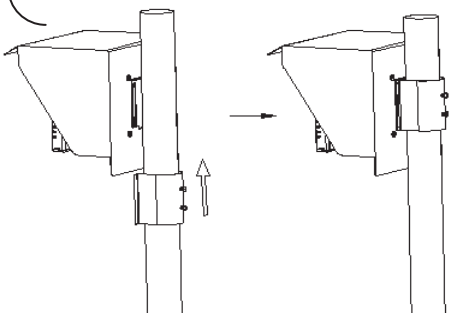

Sun Shield (Pipe mounting, Optional)
(Order No.: 8-35 + 8-35-1)

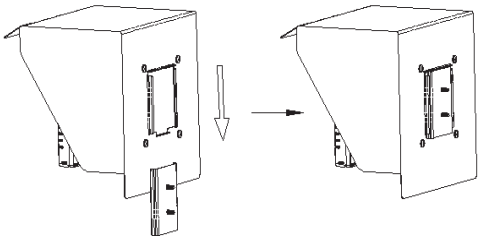

Sun Shield (Wall mounting, Optional)
(Order No.: 8-35 + 8-35-2)

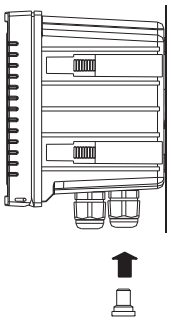

Insert the single hole rubber plug into the unused cable gland, and tighten up the cable gland to prevent from the penetration of water vapor.

3. Overview of Conductivity transmitter EC-4310

3.1 Illustration of rear panel

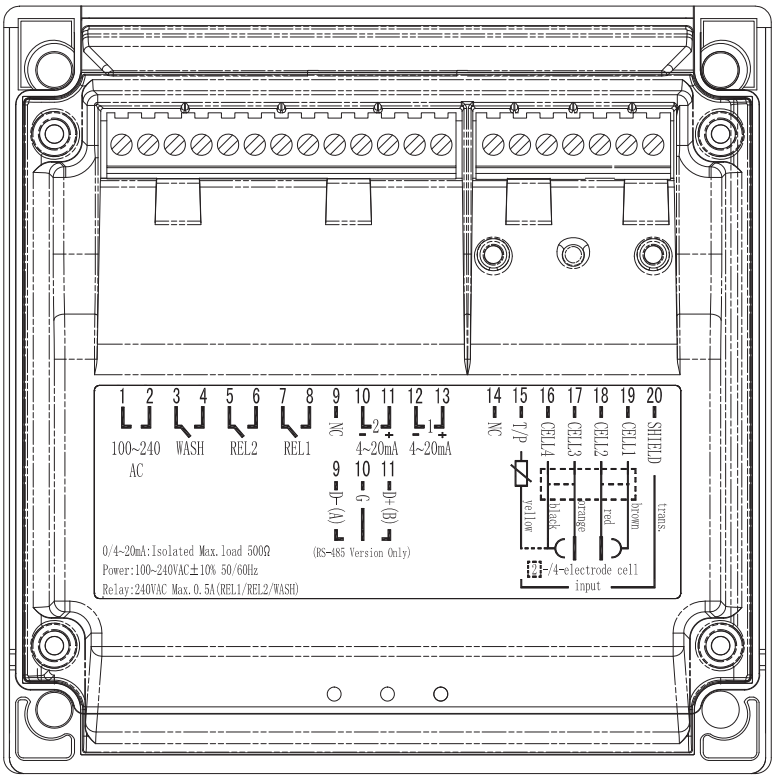

3.2 Illustration of terminal function

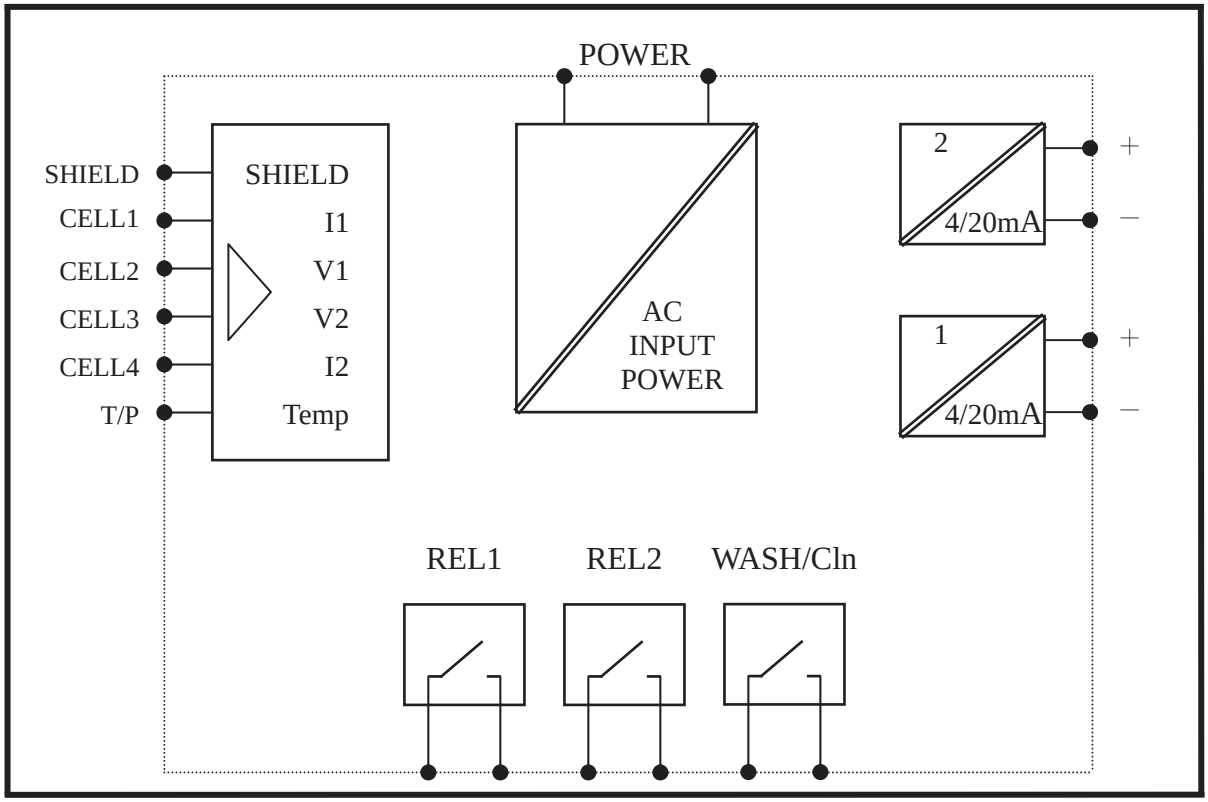

3.3 Description of terminal function

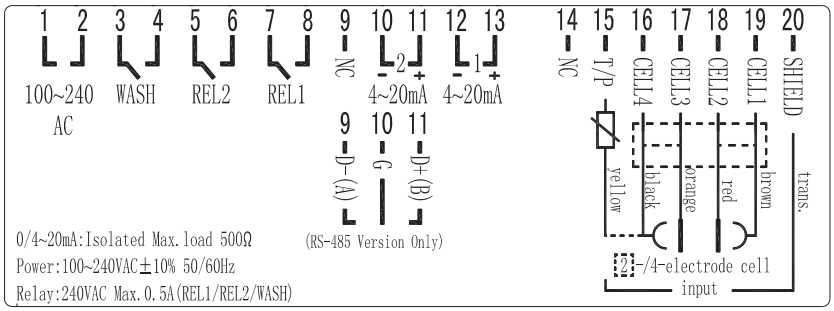

1 2 — **100~240 AC**：Power supply terminal

3 4 — **WASH**：Wash relay contact for an external relay

5 6 — **REL2**：Second alarm control, the contact for an external relay

7 8 — **REL1**：First alarm control, the contact for an external relay

9 — **NC / D-(A)**： None contact

10 — **4~20mA -terminal / G**：Temperature current output terminal -, for an external recorder or PLC control

11 — **4~20mA +terminal / D+(B)**：Temperature current output terminal +, for an external recorder or PLC control

12 — **4~20mA -terminal**：Master measure current output terminal -, for an external recorder or PLC control

13 — **4~20mA +terminal**：Master measure current output terminal +, for an external recorder or PLC control

14 — **NC**：None contact

15 — **T/P**：Connect the cell wire of temperature probe

16 — **CELL4**：The black cell wire or Current electrode 2

17 — **CELL3**：The orange cell wire or Voltage electrode 2

18 — **CELL2**：The red cell wire or Voltage electrode 1

19 — **CELL1**：The brown cell wire or Current electrode 1

20 — **SHIELD**：The transparent cell wire

3.4 Wiring of cable

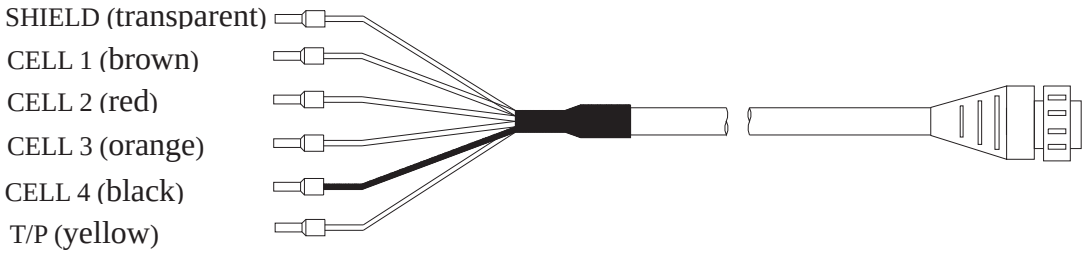

3.5 Circuit of cable

	SUNTEX Conductivity Cell			Others
Terminal sign	2-Electrode Cell 8-221/8-222/8-223 4-Electrode Cell 8-241/8-241-01/8-242/8-244	Fixed Cable Resistivity Cell 8-11-3	Fixed Cable Conductivity Cell 8-12-6	Please read the instruction of the cells
SHIELD	Transparent line	Shield line	Shield line	SHIELD
CELL 1	Brown line	Short with transparent line	Short with transparent line	Current electrode 1
CELL 2	Red line			Voltage electrode 1
CELL 3	Orange line	Short with white line	Short with green line	Voltage electrode 2
CELL 4	Black line			Current electrode 2
T/P	Yellow line	Yellow line	Red line	T/P(the other side for CELL 4

Note: If use other brand's 2-Electrode cell, the circuit of cable is the same with that for 8-11-3 or 8-12-6 cell.

3.6 Illustration of electrical connection

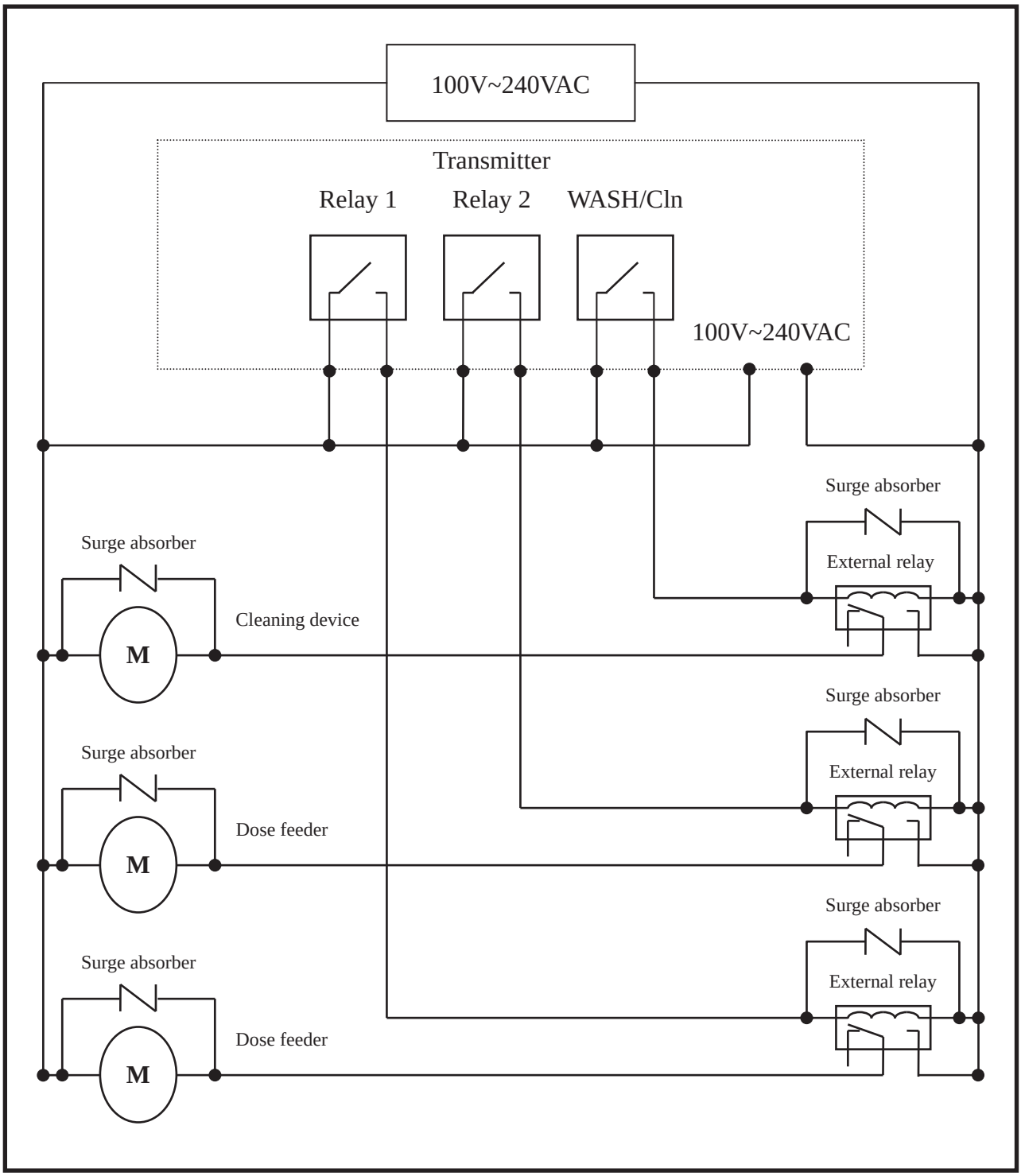

Note: The transmitter built-in miniature relay is necessary to be repaired and replaced by professional technicians. It is recommended to use an external relay (Power Relay) to activate the external equipments.

3.7 Online EC/RC pipe system（Optional）

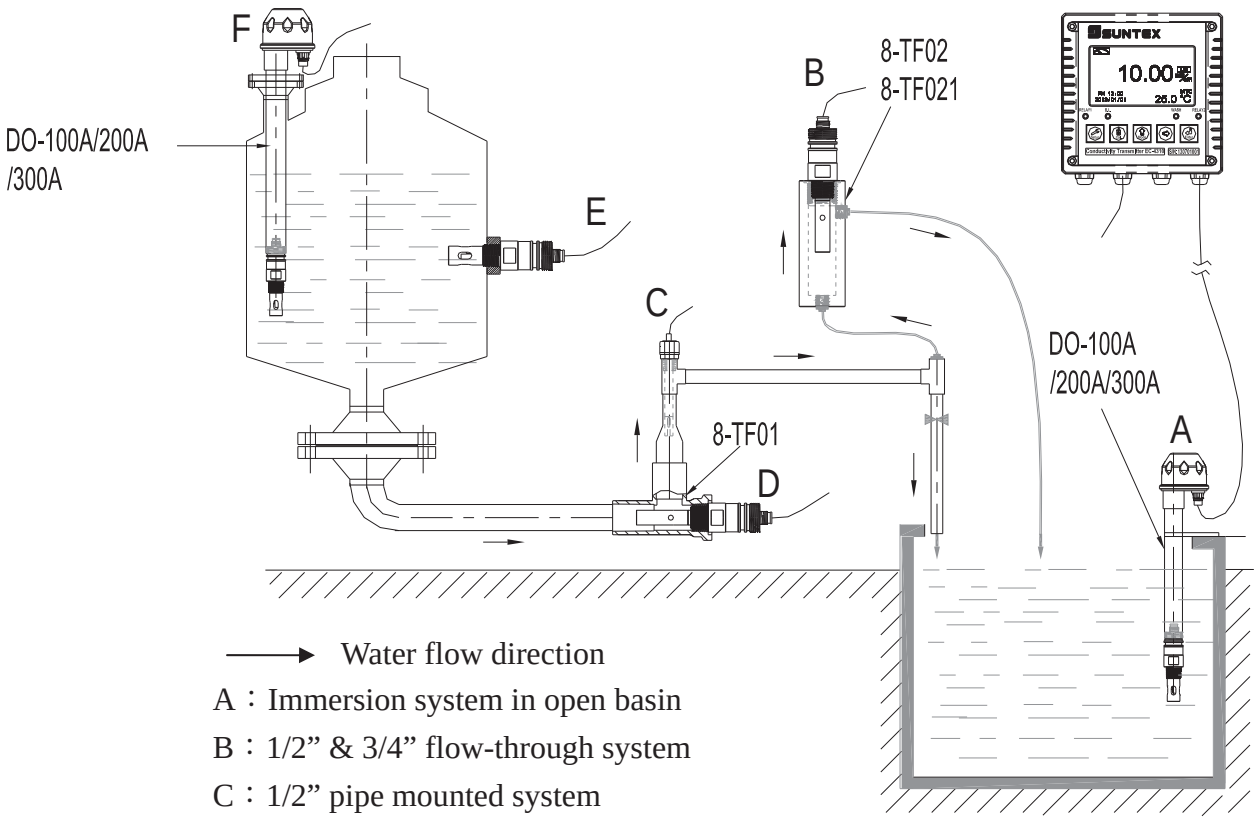

Water flow direction

A：Immersion system in open basin

B：1/2” & 3/4” flow-through system

C：1/2” pipe mounted system

D：3/4” horizontal pipe mounted system

E：3/4” side-entry system in vessel

F：Top-entry system in closed vessel

4. Configuration

4.1 Illustration of front panel

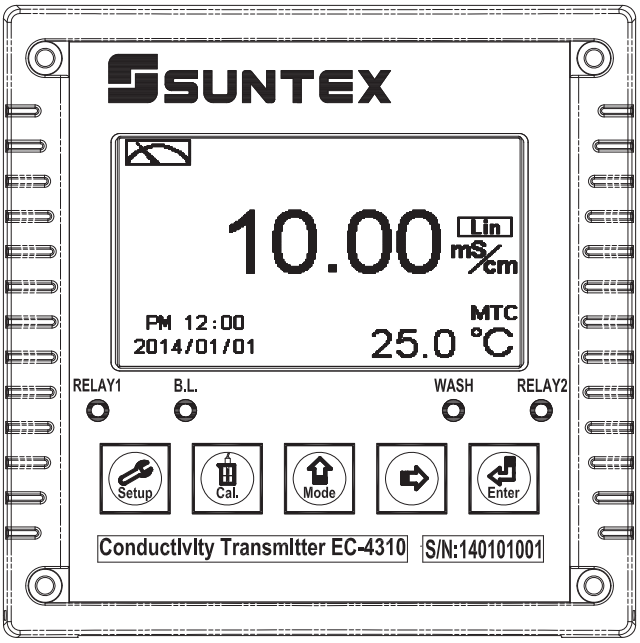

4.2 Keypad

In order to prevent inappropriate operation by others, before the parameter setting and calibration, the operation applies multi-keys, and coding protection if necessary. Description of the key functions is in the following:

: In the parameter set-up mode, pressing this key allows you exit parameter set-up mode and back to Measurement mode.

: In the Calibration mode, pressing this key allows you exit Calibration mode and back to Measurement mode.

: 1. In the parameter set-up mode and Calibration mode, pressing this key to select leftward or change to another page.
2. When adjusting value, press this key to increase the value.

: 1. In the parameter set-up mode and Calibration mode, pressing this key to select rightward or change to another page.
2. When adjusting value, press this key to decrease the value.

: Key for confirmation; pressing this key is essential when modifying data value or selecting the parameter setting items in the window.

4.3 LED indicators:

WASH : Washing device operation indicator

RELAY1 : Controlling of dose feeding operation indicator (Relay 1)

RELAY2 : Controlling of dose feeding operation indicator (Relay 2)

B.L. : Light sensor, the lamp will light or go out as the change of environmental brightness in the automatic display backlit mode.

4.4 Display:

1. When the clean function is activated, the display shows “HOLD” and twinkles the description, “Clean Running”. At the same time, the WASH indicator LED lights up, and the transmitter automatically turns off Relay 1 and Relay 2 function. After finishing cleaning, the Relay 1 and Relay 2 will automatically back to normal status.
2. When Relay 1/Relay 2 which is set in high setting point is in action, the display shows and twinkles the description, “REL 1-HI/REL 2-HI”, and RELAY1/RELAY2 indicator LED lights up. When Relay 1/Relay 2 which is set in low setting point is in action, the display shows and twinkles the description, “REL 1-Lo/ REL 2-Lo”, and RELAY1/RELAY2 indicator LED lights up.
3. When the Analog 1 current output exceeds the upper/lower limitation, the display twinkles ” S-mA ▲ / S-mA ▼ ” or ” Ω-mA ▲ /Ω-mA ▼ “.
4. When the Analog 2 current output exceeds the upper/lower limitation, the display twinkles “°C-mA ▲ / °C –mA ▼ ”.

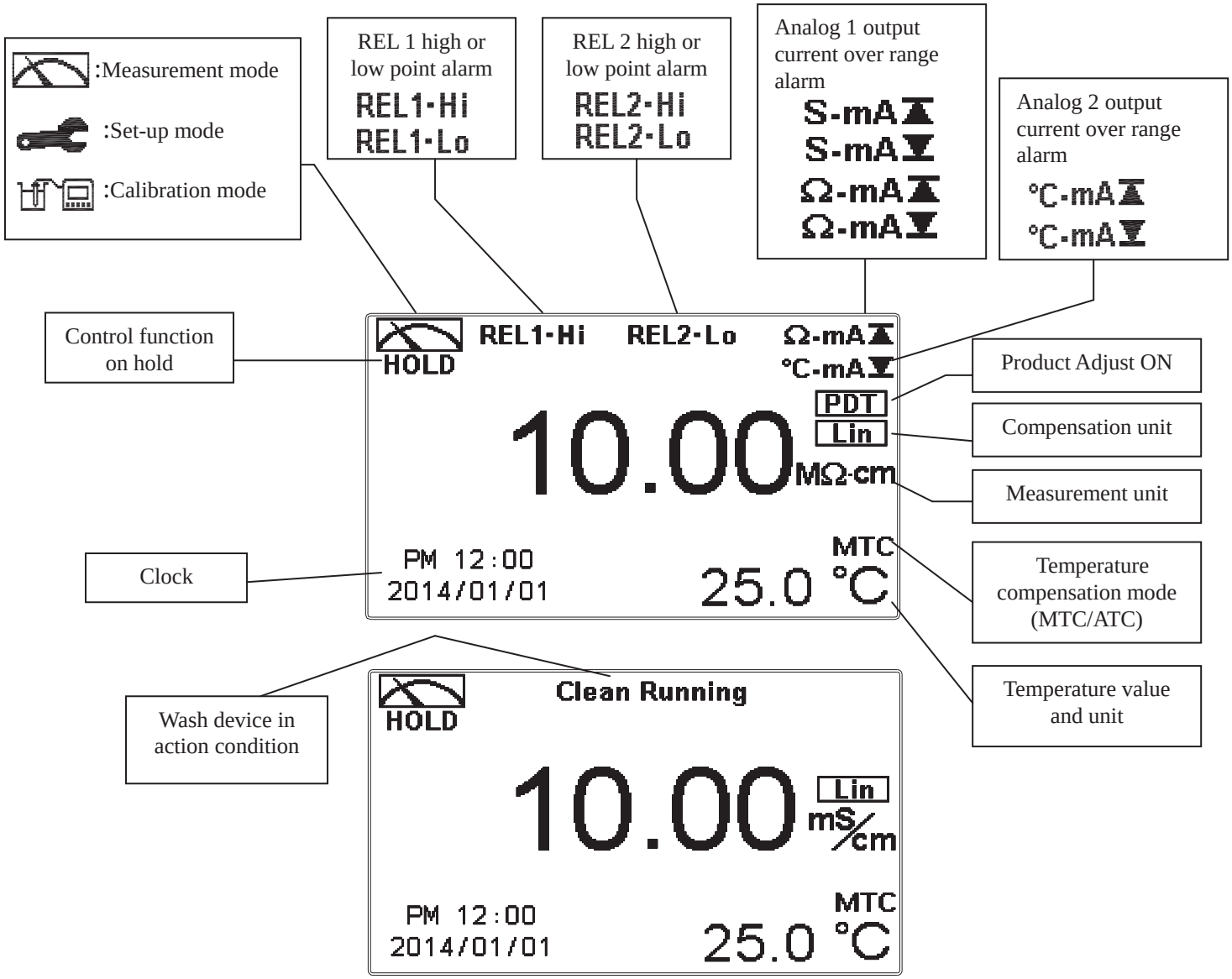

Note: The “HOLD” warning text appears when clean function is activated, or when entering setup menu, or when entering calibration menu. Under HOLD status, the corresponding display and output as follows:

1. Both Relay 1 and Relay 2 cease from action. If enter setting menu or calibration menu under clean status, the instrument will stop clean status automatically.
2. The current output which is corresponding to measurement value remains at the last output value before HOLD status.

5. Operation

5.1 Measurement mode:

After all electrical connections are finished and tested, connect the instrument to the power supply and turn it on. The transmitter will automatically entering measurement mode with the factory default settings or the last settings from user.

5.2 Set-up menu:

Please refer to the set-up instructions in Chapter 6. Press [Setup] and [Mode] simultaneously to enter into set-up menu, and press [Setup] to go press to back to measurement mode.

5.3 Calibration menu:

Please refer to the calibration instructions in Chapter 7. Press [Cal.] and [Mode] simultaneously to enter into calibration menu, and press [Cal.] to go back to measurement mode.

5.4 Shortcuts: In the measurement mode, if selecting MTC for temperature compensation mode, you may press [Mode] and [⇨] to adjust MTC temperature value.

5.5 Default value:

5.5.1 Setting default value:

Measurement mode: Conductivity, Auto-Range
Temperature compensation: NTC 25˚C
Temperature Coefficient: Lin, 2.00%
Relay 1: High point alarm: AUTO, SP1= 100.0mS, Hys.=10.0mS
Relay 2: Low point alarm: AUTO, SP2 =10.0 mS, Hys.= 1.00 mS
Wash time: OFF
Analog 1 current output (Cond/Res): 4~20 mA, 0.00~199.9mS
Analog 2 current output (Temp): 4~20 mA, 0~100.0˚C
Date & Time: 2014/1/1 00:00:00
Digital filter: 0
Backlight setting: Off
Contrast: 0
Auto back: Auto, 3 minutes
Code set-up: Off

5.5.2 Calibration default value:

Cal Type: No Cal
Cal Temp: None
Cell Constant: 0.5000
Auto back: Auto, 3 minutes
Code set-up: Off

Note: The factory default of calibration presetting is “No Cal”, and the cell constant setting is “0.5000”. It means that the user has not calibrated the sensor with the transmitter yet. When selecting standard solution to finish calibration, the display shows cell constant of the cell and the value of the standard solution.

6. Settings

Block diagram of setting-part 1

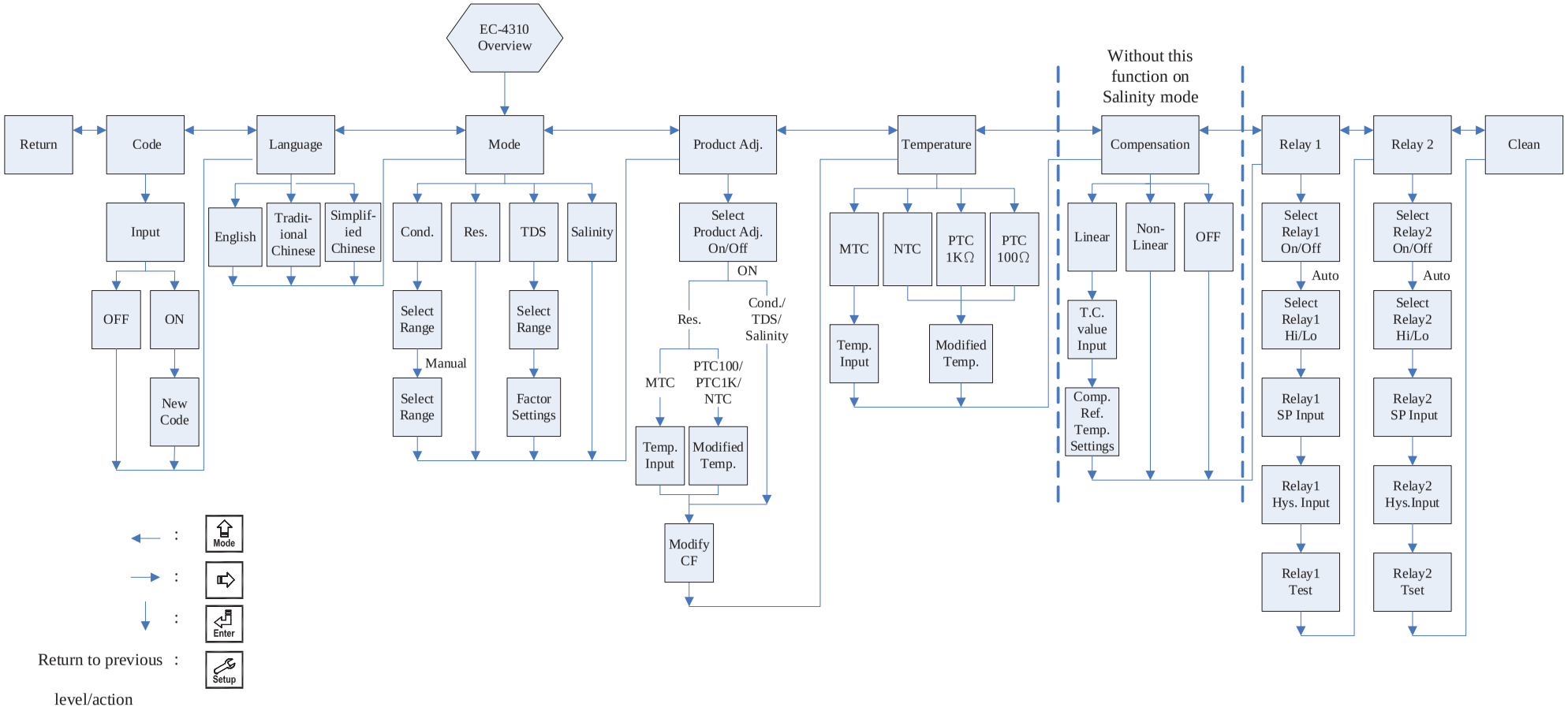

Continue on next page

Block diagram of setting-part 2

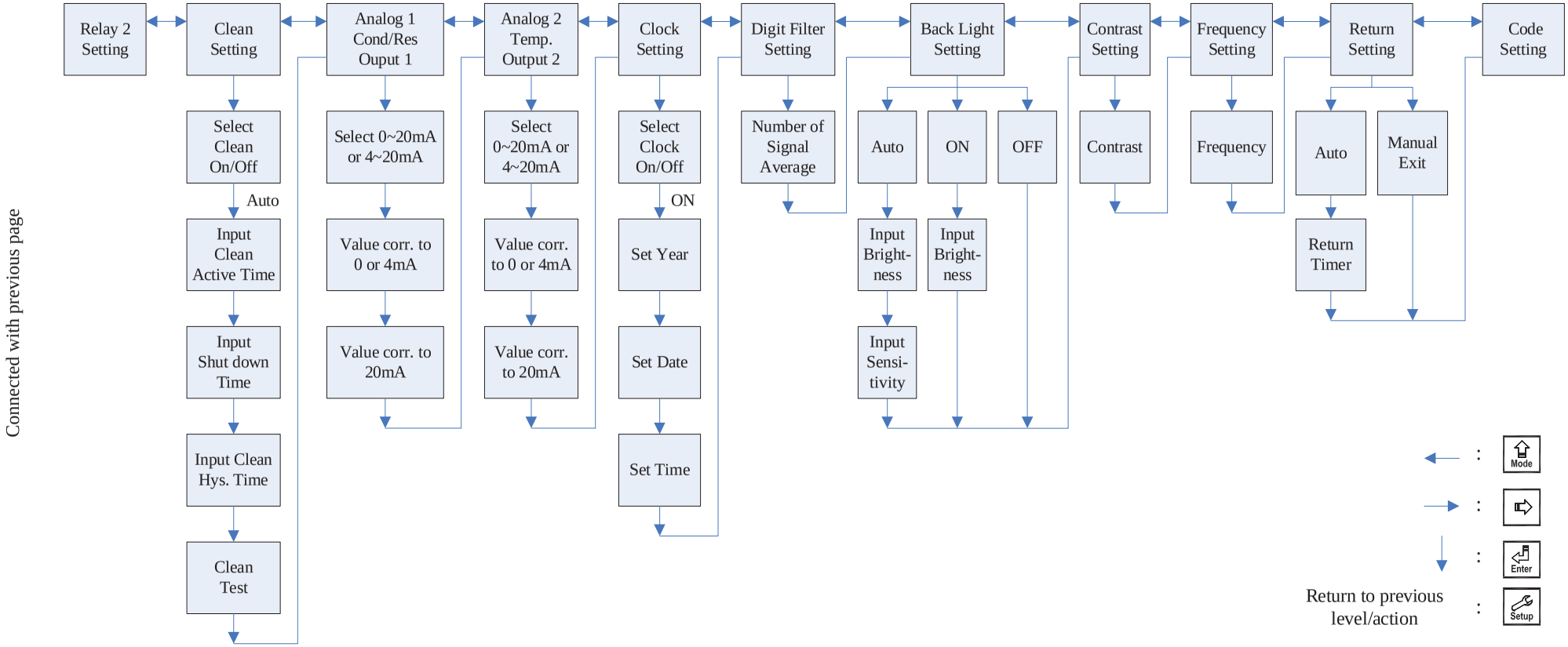

6.1 Entry of set-up menu

In the measurement mode, pressing the two keys Setup and Mode simultaneously allows you enter the overview of current setting, and press Enter to enter the set-up mode to modify the setting if necessary.

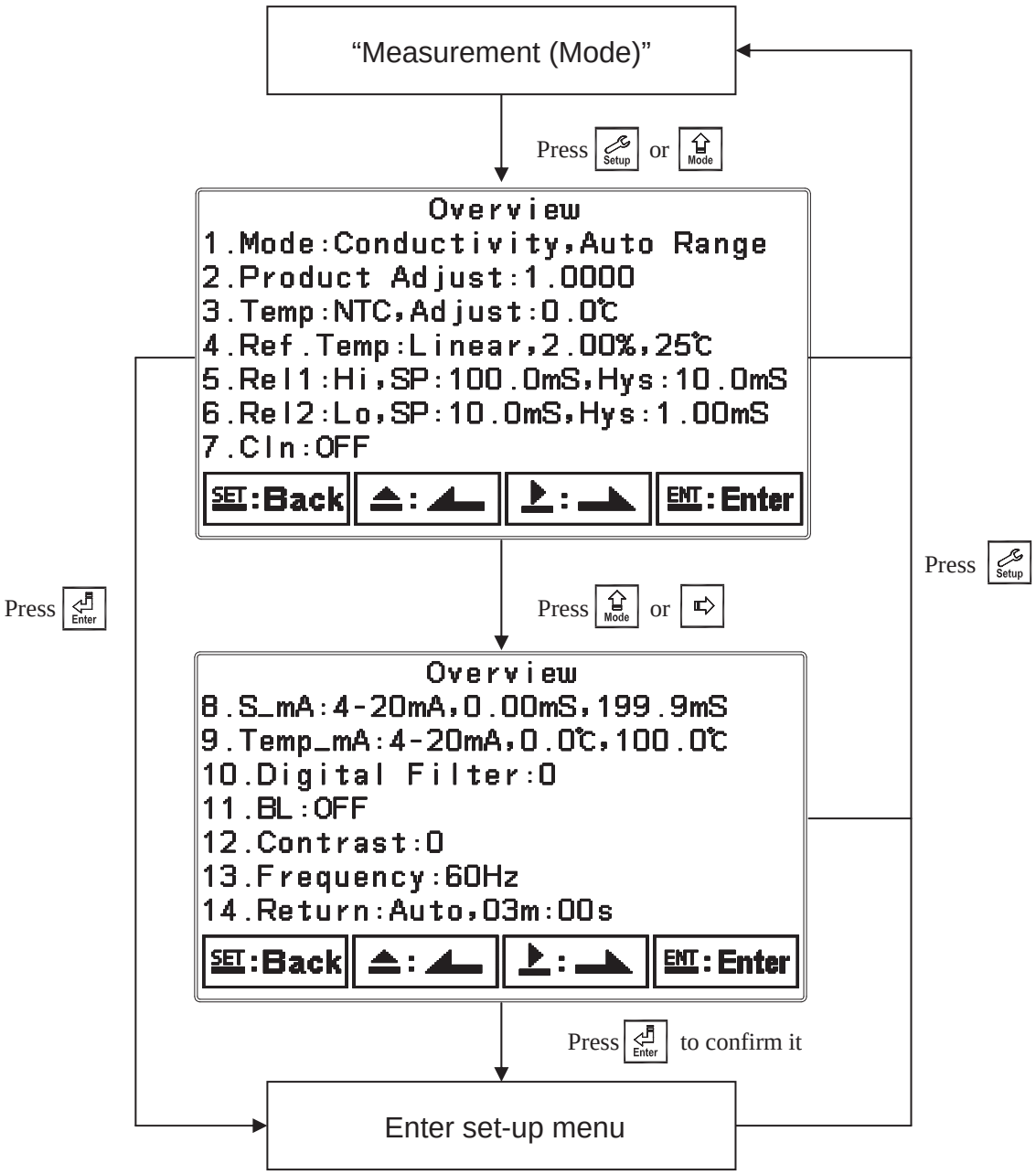

6.2 Security code of settings

After entering set-up mode, select “code” item, press Enter to enter into code procedure. **The code pre-setting is 1111.**

Note: The code of setting mode is prior to the code for calibration. That means that the code of setting mode can be used for the code of calibration mode.

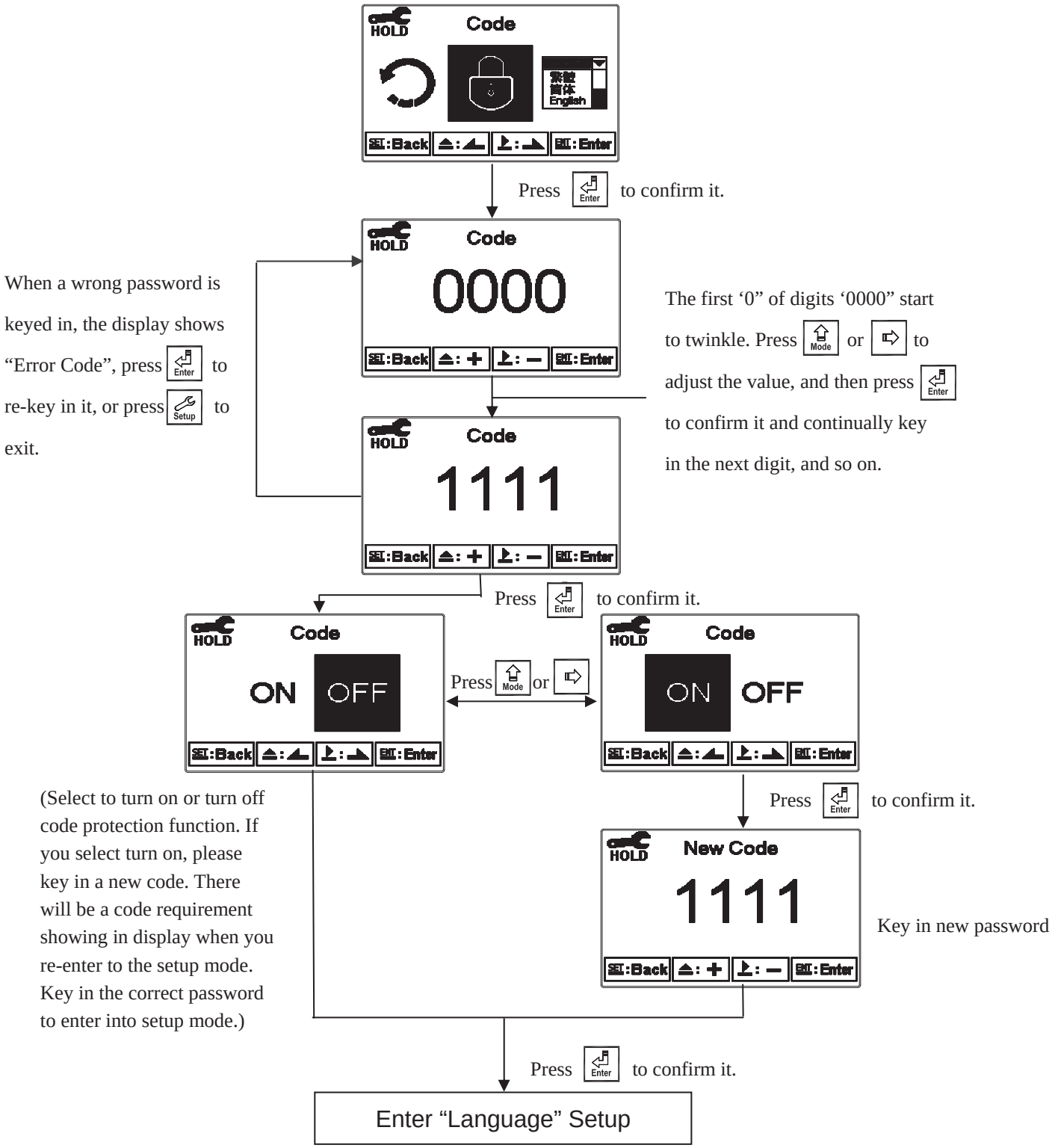

6.3 Language

Enter Language setup menu, select the system language from English, Traditional Chinese and Simplified Chinese.

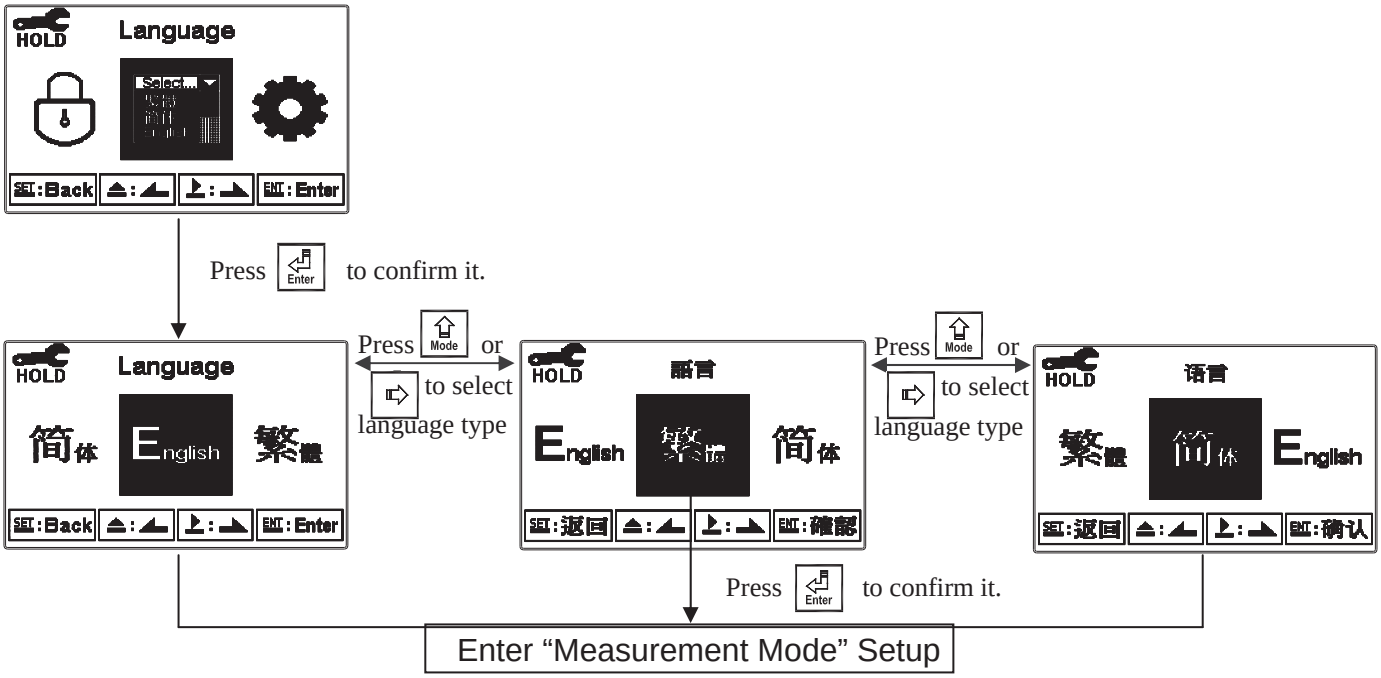

6.4 Mode

Enter setup of “Mode”. Select between “Conductivity (Cond.)”, “Resistivity (Res.)”, “Salinity” or “TDS” measurement.

Cond.: the measuring range limit needs to be selected from Auto Range or Manual for 2.000µS, 20.00µS, 200.0µS, 2000µS, 20.00mS, 200.0mS or 2000mS.

TDS: select the measuring range within 0~19999ppm or 0~199.99ppt and set the factor value.

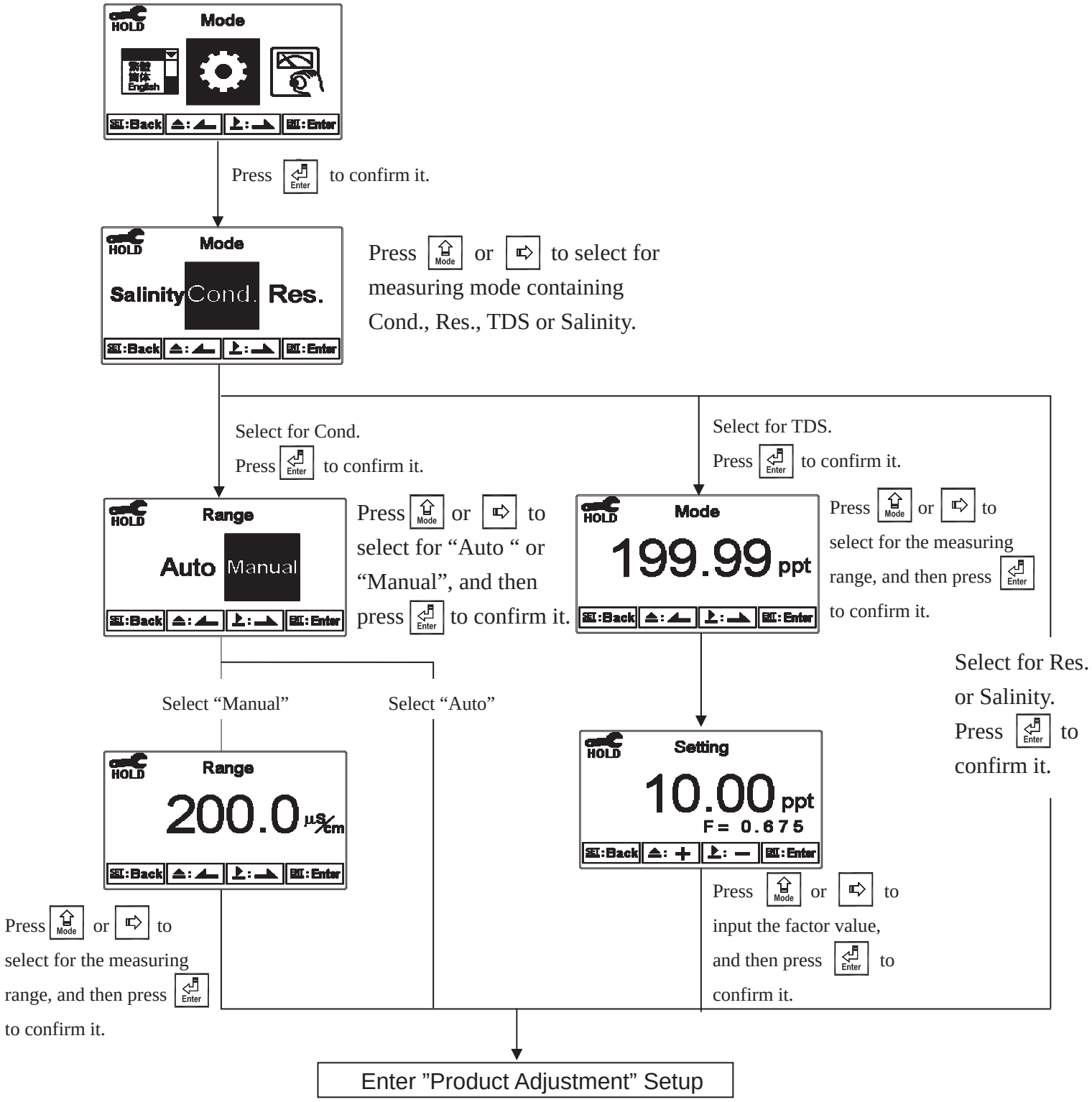

6.5 Product Adjustment

Enter setup of product adjustment to make the fine adjustment of the measurement reading. For ultra-pure water application, the function can increase the resolution of cell constant, and it makes users adjust the cell constant through a cell factor in the field. It also allows two decimal of the temperature display which increases the sensitivity of cell constant and temperature change and achieves the fine adjustment of reading up to 0.01Meg ohm. It helps the users to see the small change of reading or trend in ultra-pure water application.

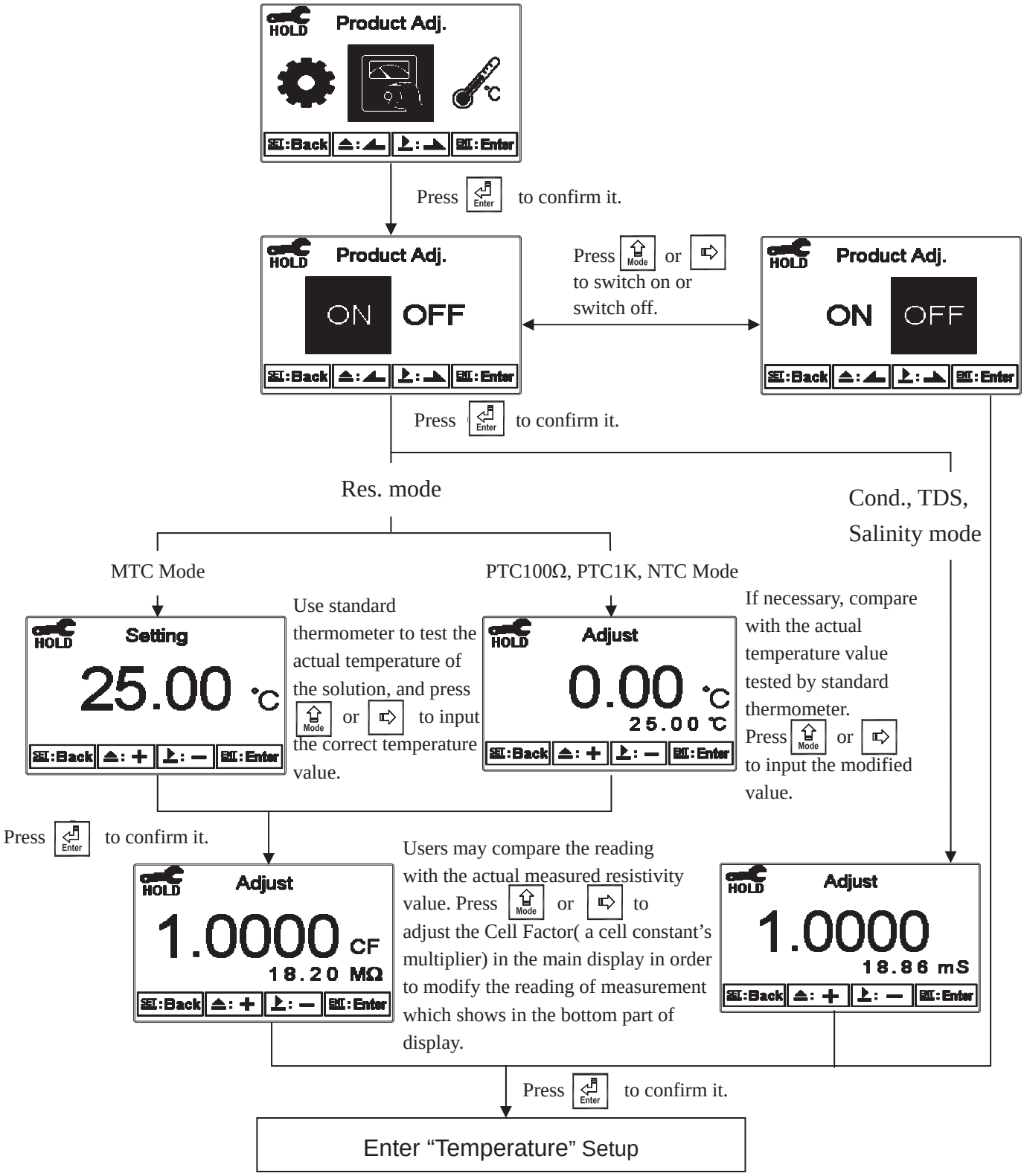

6.6 Temperature

Enter setup of “Temperature” to select temperature compensation mode. Select from NTC(NT30K), PTC1KΩ(PT-1000), PTC100Ω(PT-100) for Auto Temperature Compensation or MTC(Manual adjustment).

Note: Due to two-wiring set-up of temperature circuit, length or thickness of wiring may cause the temperature error between actual temperature & measured temperature when selecting PTC1KΩor PTC100Ω for temperature compensation. After that, the temperature error can be modified by the next step “Adjust”.

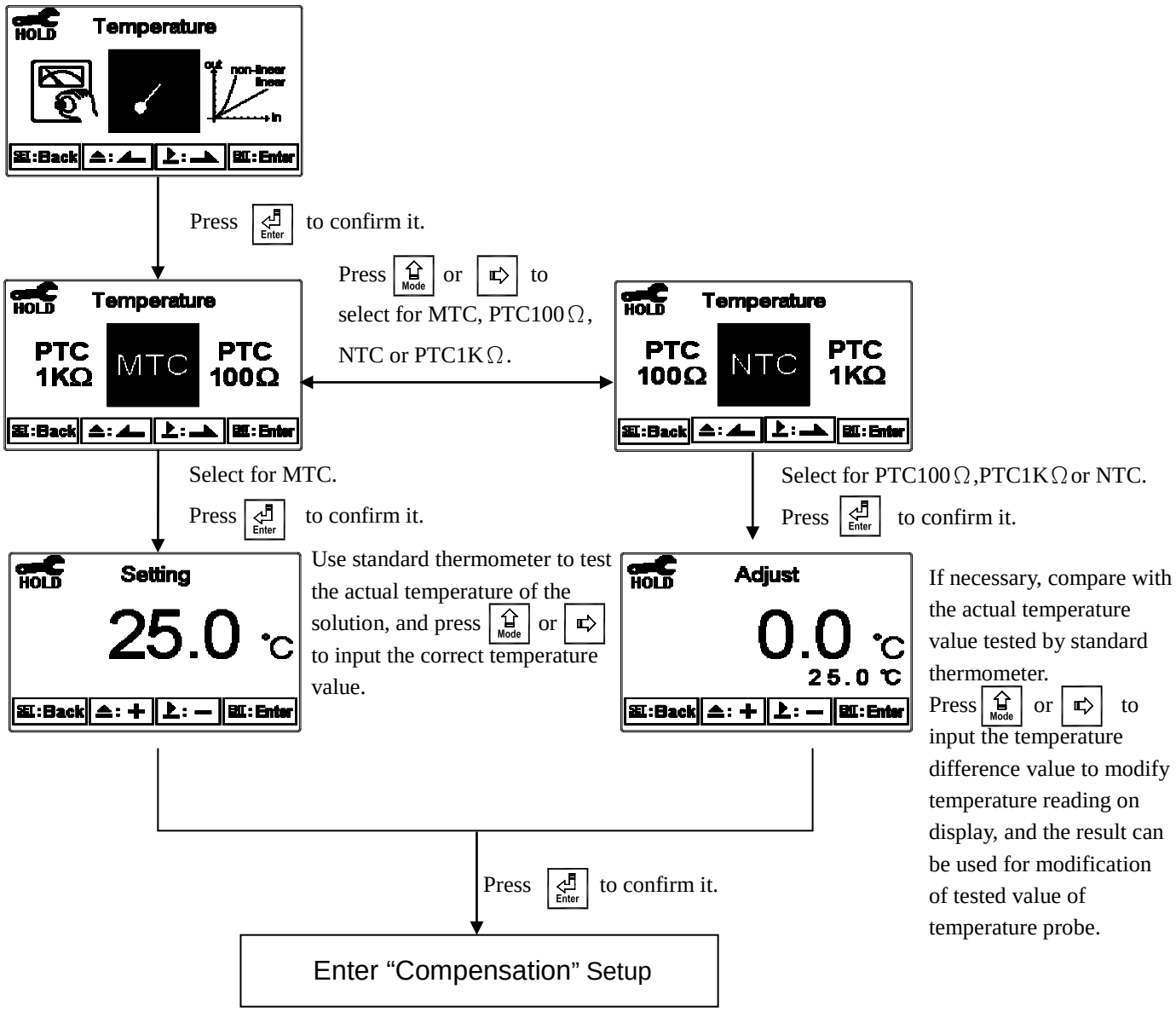

6.7 Temperature Compensation Coefficient

The instrument's reference temperature of temperature compensation presets 25℃, and the temperature compensation coefficient presets 2.00%.

Enter setup of Temperature Compensation Coefficient mode, and select linear (Lin.), non-linear (Non-Lin.), or non-compensated (OFF) according to your measurement need for temperature coefficient. Normally, select linear compensation for conductivity measurement (Cond.), and select non-linear compensation for resistivity measurement.

Temperature Compensation Coefficient (hereinafter referred to as TC): Conductivity of solution increases with rising temperature. The relationship is as follows:

$Ct_{,ref}$	Conductivity at 25˚C	Formula 1：Ct = Ctref { 1+α(T－tref) }
Ct	Conductivity at T˚C	
T	Measured solution temperature	Formula 2：α= (Ct－Ctref) / { Ctref (T－tref)}
α	Temperature compensation coefficient	

How to get TC of solution:

According to the formulas above, take an example for 0.01MKCl. Set the TC of the instrument to non-compensated（OFF）, and control the temperature at 25˚C and at 20˚C. $Ct_{,ref}$ means the measured value at 25˚C(Such as $C_{t,25}$ = 1413μS). Ct means the measured value at 20˚C(Such as C_{20} = 1278μS). According to both formulas above, α＝1.91%.

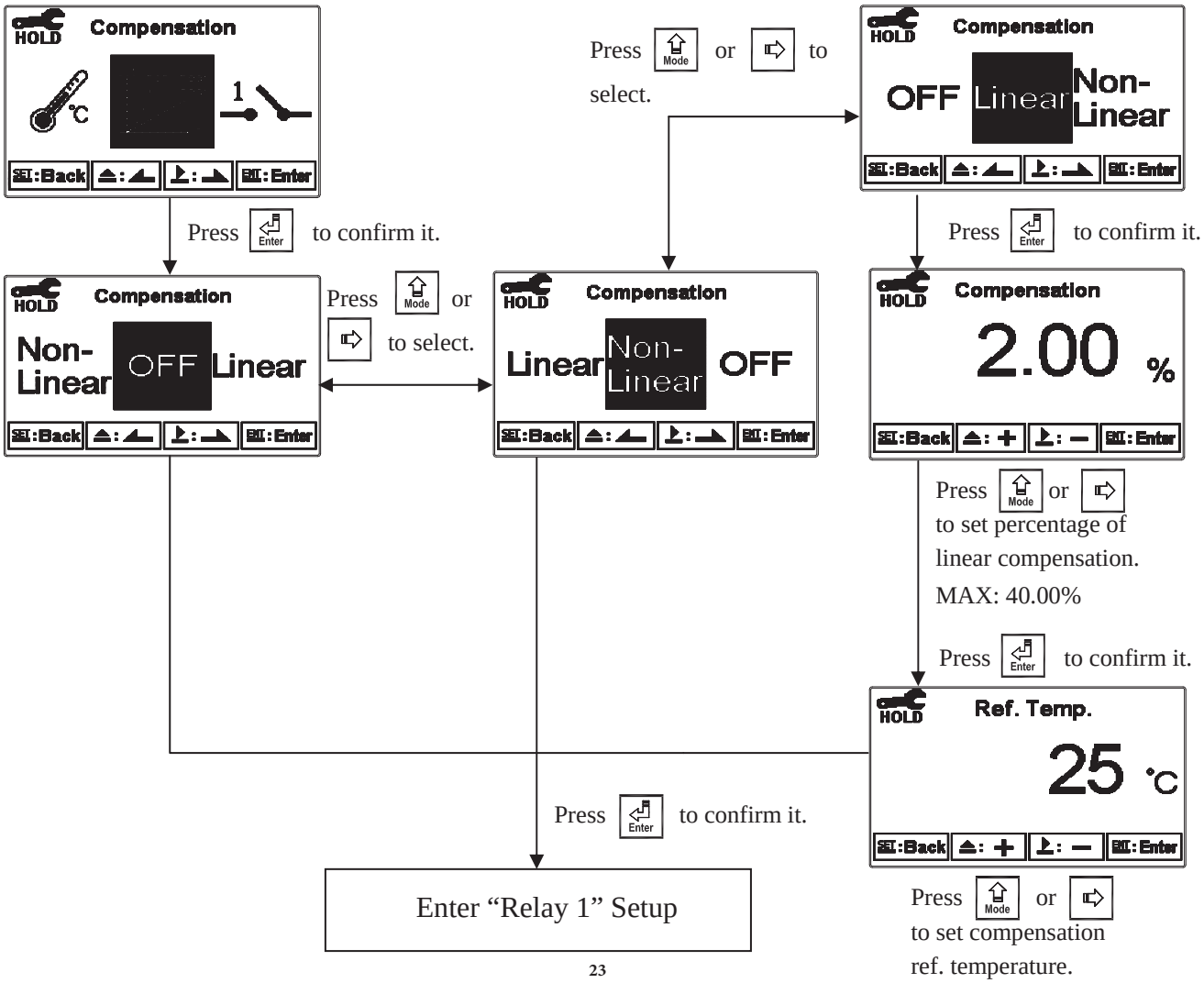

6.8 Relay 1

Enter setup of Relay 1. Select the item to turn on or turn off the relay 1 function. If you select to turn on the relay 1, then select for using relay 1 as “High set-point” alarm or “Low set-point” alarm. Set the value of set-point (SP) and Hysteresis (Hys.). The relationship between parameters can refer to an explanatory diagram of the box (as a high point alarm).

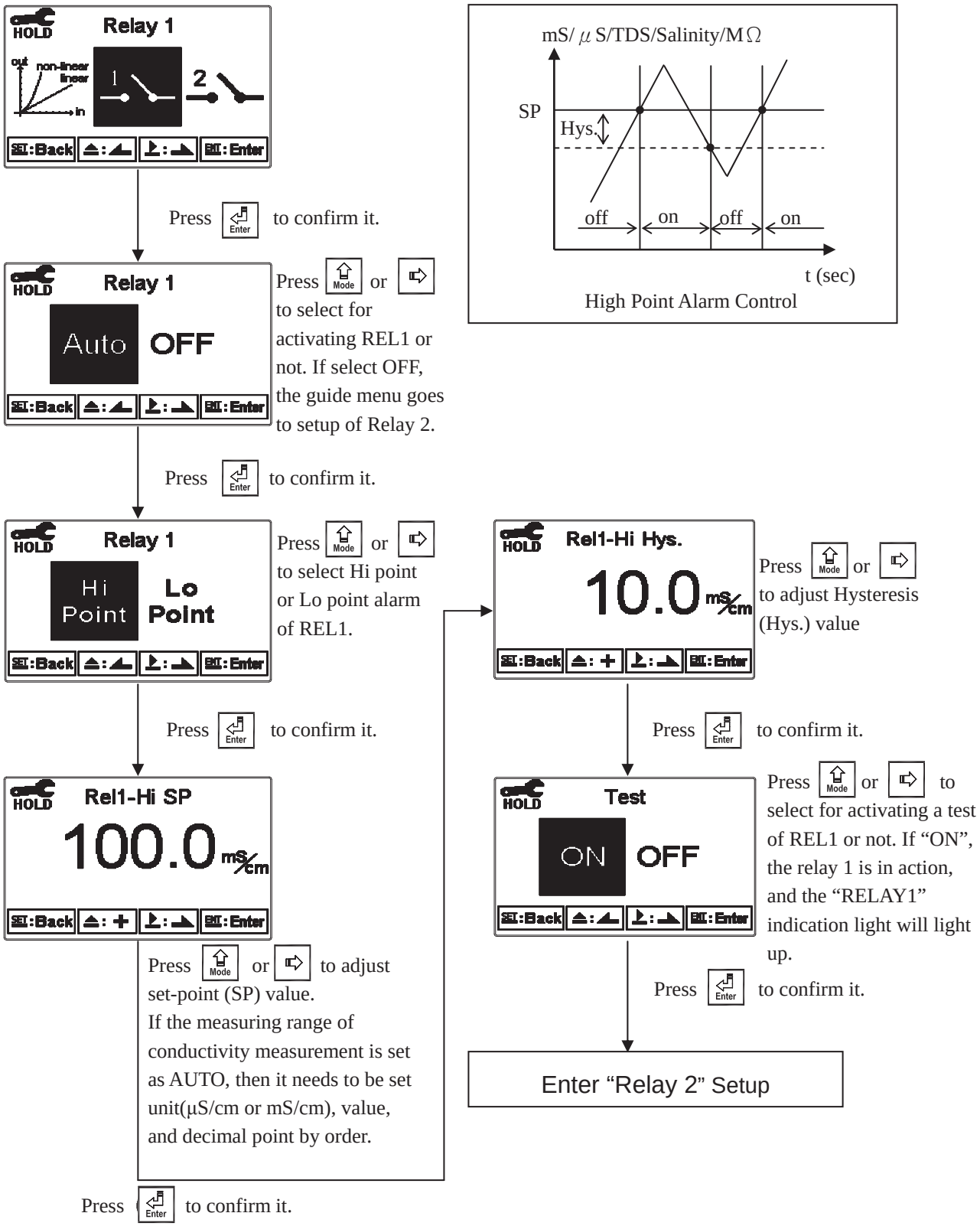

6.9 Relay 2

Enter setup of Relay 2. Select the item to turn on or turn of the relay 2 function. If you select to turn on the relay 2, then select for using relay 2 as “High set-point” alarm or “Low set-point” alarm. Set the value of set-point (SP) and Hysteresis (Hys.). The relationship between parameters can refer to an explanatory diagram of the box (as a low point alarm).

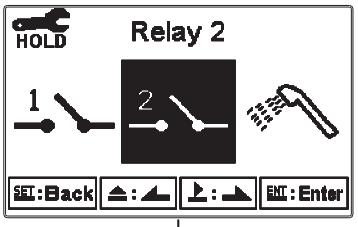

Press Enter to confirm it.

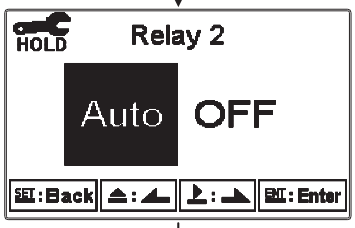

Press Mode or to select for activating REL2 or not. If select OFF, the guide menu goes to setup of clean.

Press Enter to confirm it.

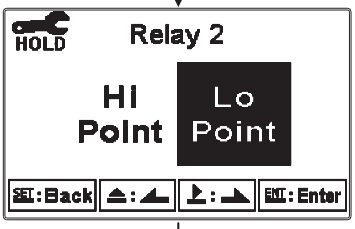

Press Mode or to select Hi point or Lo point alarm of REL2.

Press Enter to confirm it.

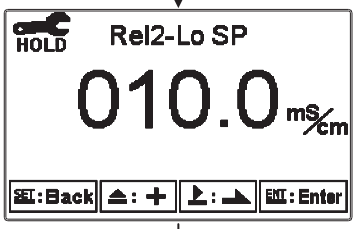

Press Mode or to adjust set-point (SP) value.
If the measuring range of conductivity measurement is set as AUTO, then it needs to be set unit(μS/cm or mS/cm), value, and decimal point by order.

Press Enter to confirm it.

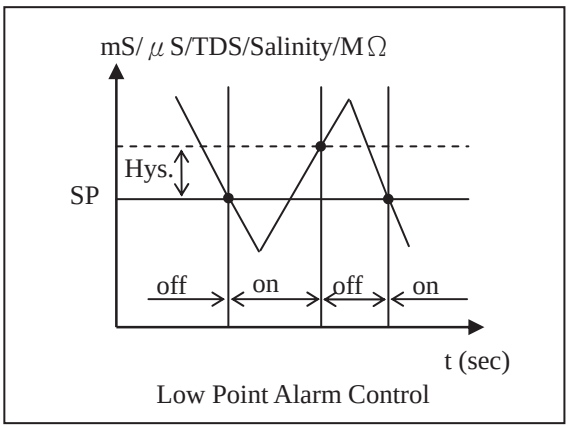

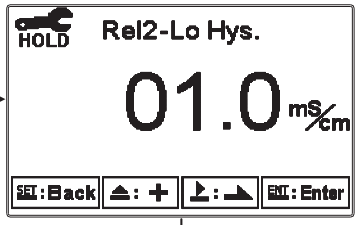

Press Mode or to adjust Hysteresis (Hys.) value

Press Enter to confirm it.

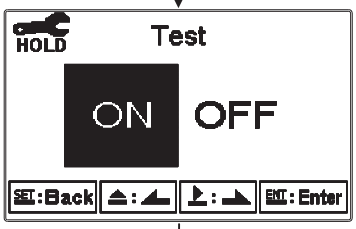

Press Mode or to select for activating a test of REL2 or not. If “ON”, the relay 2 is in action, and the “RELAY2” indication light will light up.

Press Enter to confirm it.

Enter “Clean” Setup

6.10 Clean

Enter setup of “Clean” function. Select the icon to turn on or turn off the clean function. If you select “Auto” turning on, then set the timer of the clean function including automatically turning on time and turning off time, and set the Hysteresis value(Hys.).

Note: When the clean function is turned on, if any value is set to be 0, the instrument will automatically turn off this function. When the clean function is activated under measurement mode, there is a “Clean Running” message showing on top of the display. The measured value will be remained at the last measured value before cleaning. If enter setting menu or calibration menu under clean status, the instrument will stop clean status automatically.

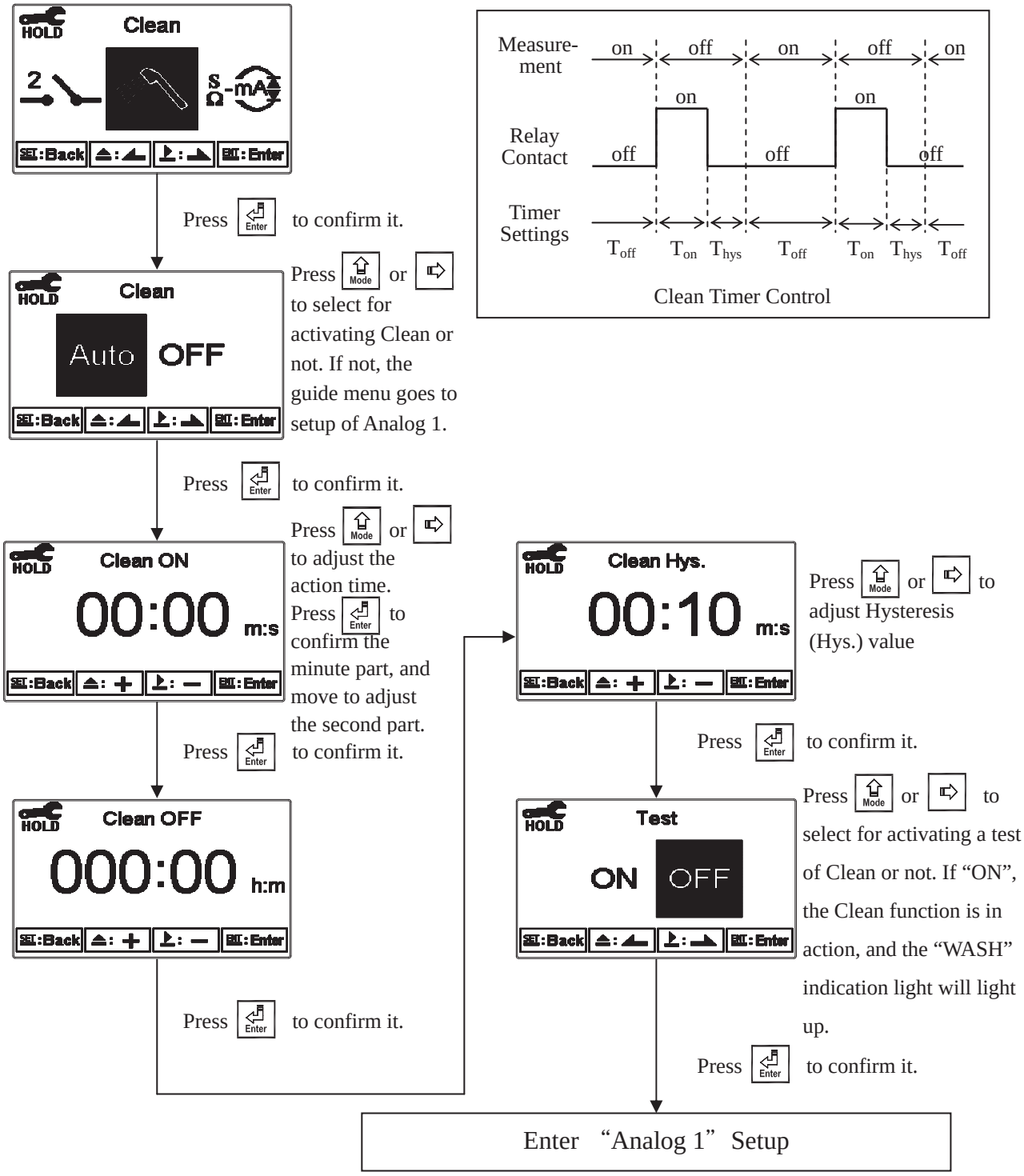

6.11 Analog output 1

Enter setup of Analog 1. Select 0~20mA or 4~20mA current output and eet the related value to the range of measurement. If the range of measurement is to be set smaller, the resolution of current output is higher. When the measured value exceeds the higher range limit, the current will remain approximately 22mA output. When the measured value exceeds the lower range limit, under 0~20mA mode the current output will remain 0mA output; while under 4~20mA mode the current output will remain approximately 2mA output. The exceptional output value can be used as a basis for failure determination. Under HOLD(measurement) status, the current output maintains the last output value before HOLD status. However, in order to keep convenience of insuring the current setting of an external recorder or of a PLC controller, the current output will be 0/4mA or 20mA under the analog output setup menu.

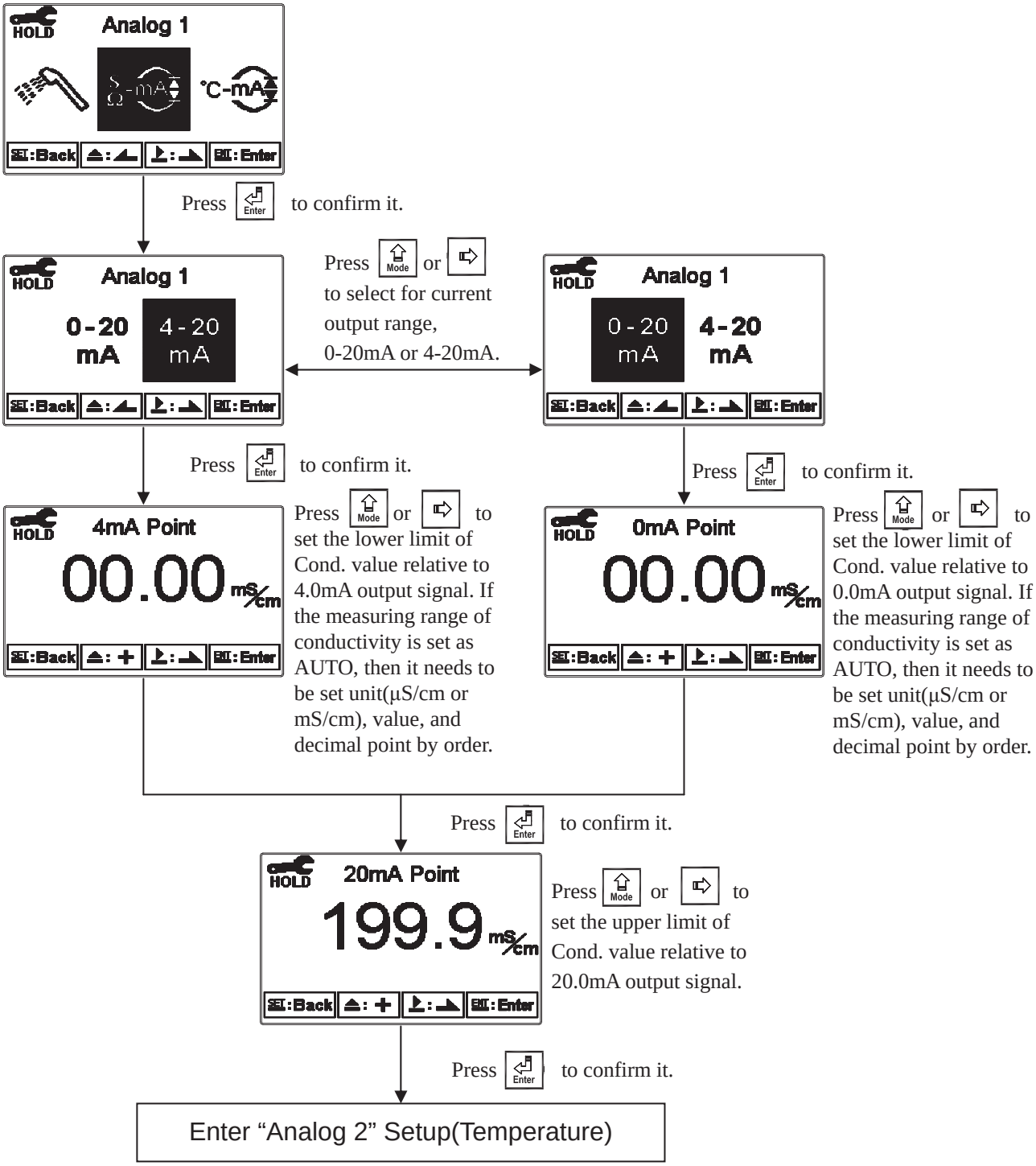

6.12 Analog output 2 (Temperature)

Enter setup of Analog 2. Select 0~20mA or 4~20mA current output. Set the related value to the range of temperature measurement. If the range of the temperature measurement is to be set smaller, the resolution of current output is higher. When the measured value exceeds the higher range limit, the current will remain approximately 22mA output. When the measured value exceeds the lower range limit, under 0~20mA mode the current output will remain 0mA output; while under 4~20mA mode the current output will remain approximately 2mA output. The exceptional output value can be used as a basis for failure determination. Under HOLD(measurement) status, the current output maintain the last output value before HOLD status. However, in order to keep convenience of insuring the current setting of an external recorder or of a PLC controller, the current output will be 0/4mA or 20mA under the analog output setup menu.

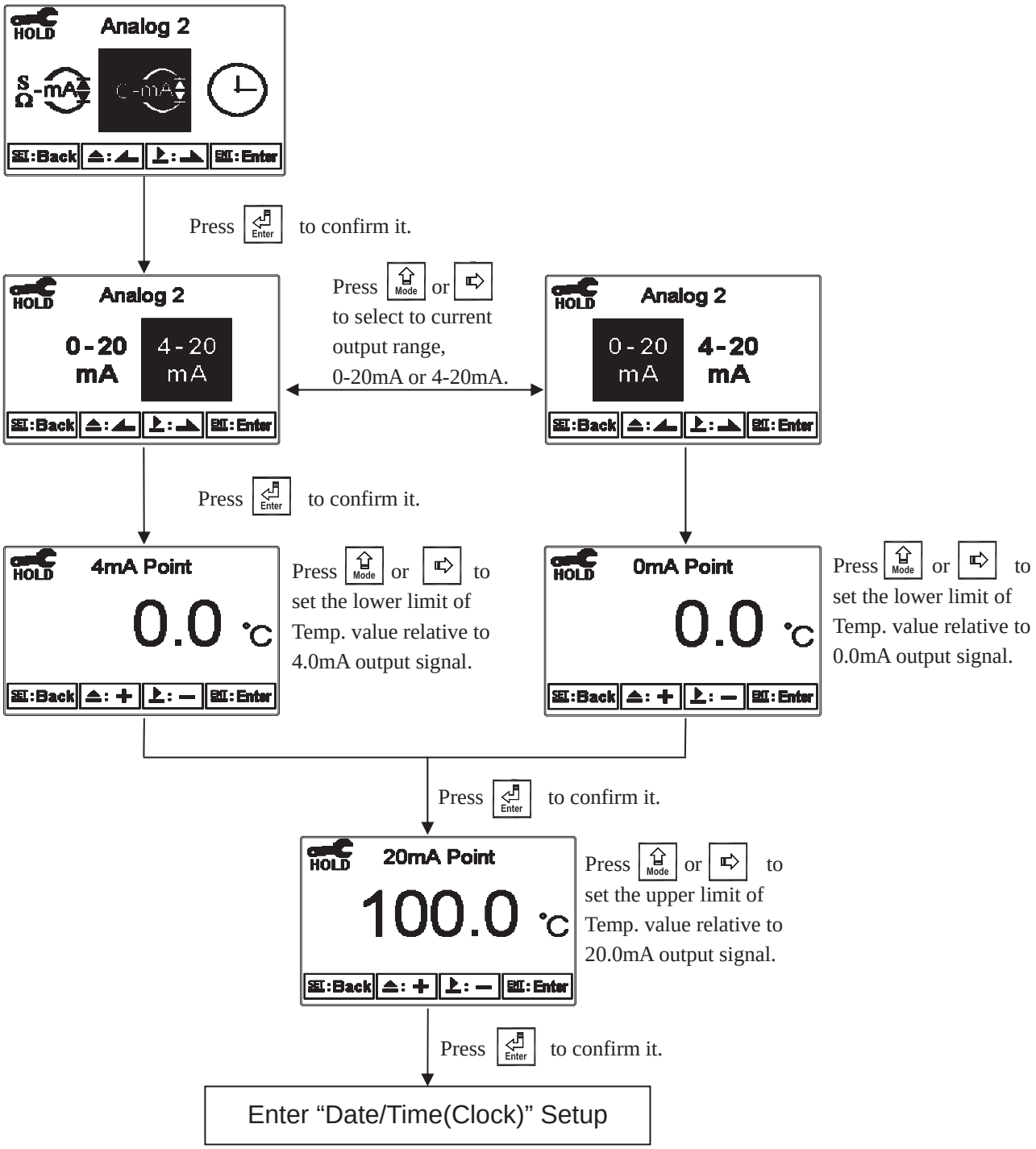

6.13 Date/Time(Clock)

Enter setup of Date/Time(Clock). Set the “Year”, “Month”, “Date”, “Hour”, and “Minute” time. If you select to turn off the clock function, there will not display clock under measurement mode. The calibration time of calibration record will also show ”OFF” under calibration overview display.

Note: The clock needs to be reset once encounters power failure.

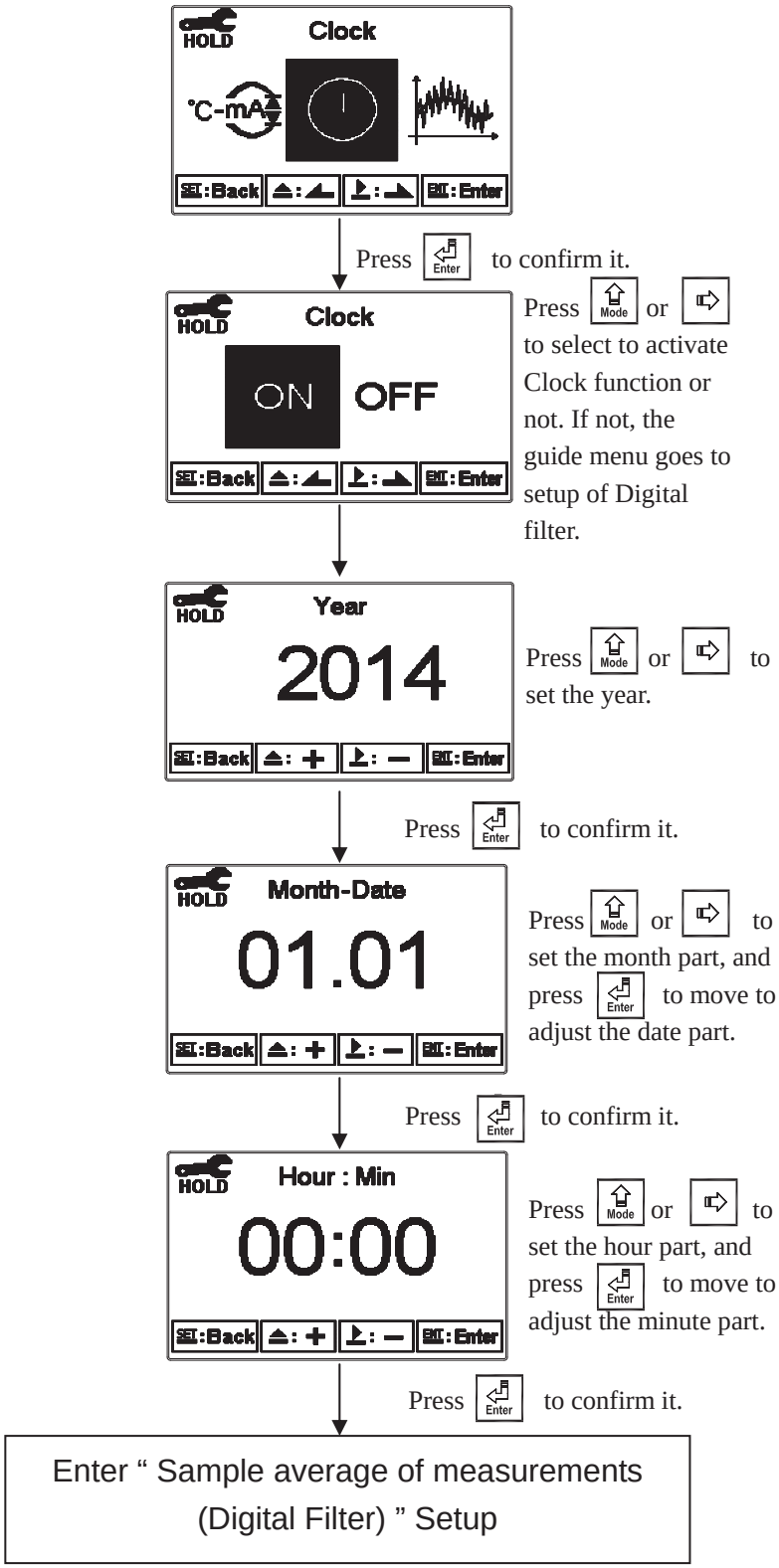

6.14 Sample average of measurements (Digital Filter)

Enter the setup of Digital filter. You may select the number of sample to be averaged each time to become a reading which is gradually counted in order to increase the stability of measurement.

Note: “0” represents auto setting according to the conductivity measurement.

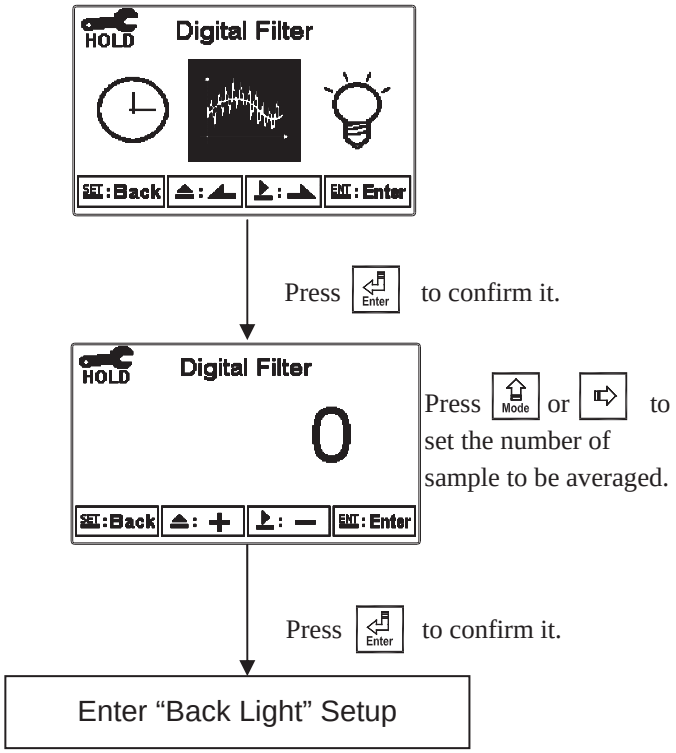

6.15 Backlight settings

Enter setup of backlight display. According to your need, you can set the brightness of display(-2~2, dark~bright) and sensitivity of the sensitization sensor(-2~2, insensitive~sensitive). Where there is a keystroke, then activate the touch-on backlight function. Regardless of what kind of backlight mode, the touch-on function will activate the backlight. If there is no keystroke for 5 seconds, the display will back to the original backlight setting status.

ON setting: The backlight is always on.
OFF setting: The backlight is off. When there is a keystroke, it enters to the touch-on status.
Auto setting: According to the ambient light, activate or deactivate the backlight. When there is a keystroke, it enters to the touch-on status.

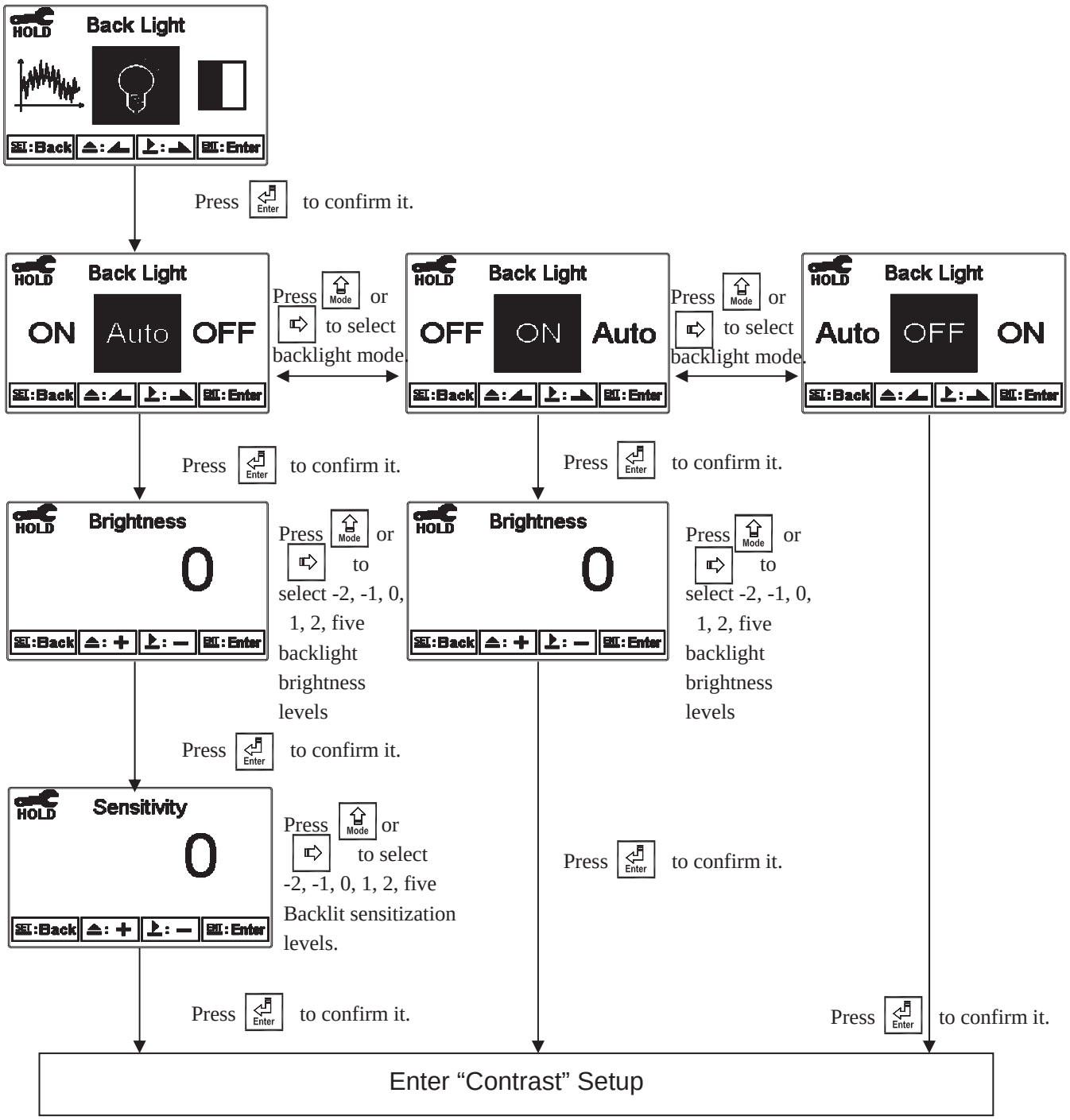

6.16 Contrast settings

Enter setup of display contrast. You can set the contrast of display according to your need.(-2, -1, 0, 1, 2, light to dark)

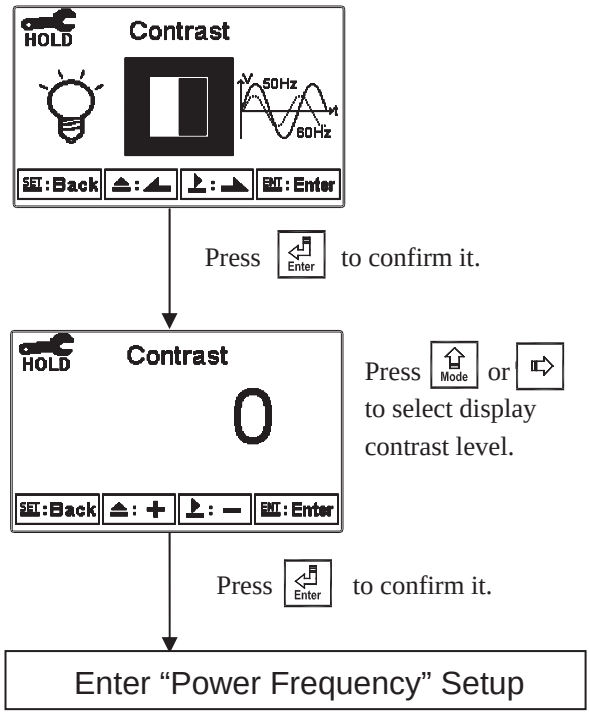

6.17 Power frequency (Frequency)

Enter setup of power frequency. You may select power frequency setting of the instrument 50Hz or 60Hz according to the local power frequency.

Note: This setting significantly affects the normal measurement of instrument, thus, be sure to make the setting correctly.

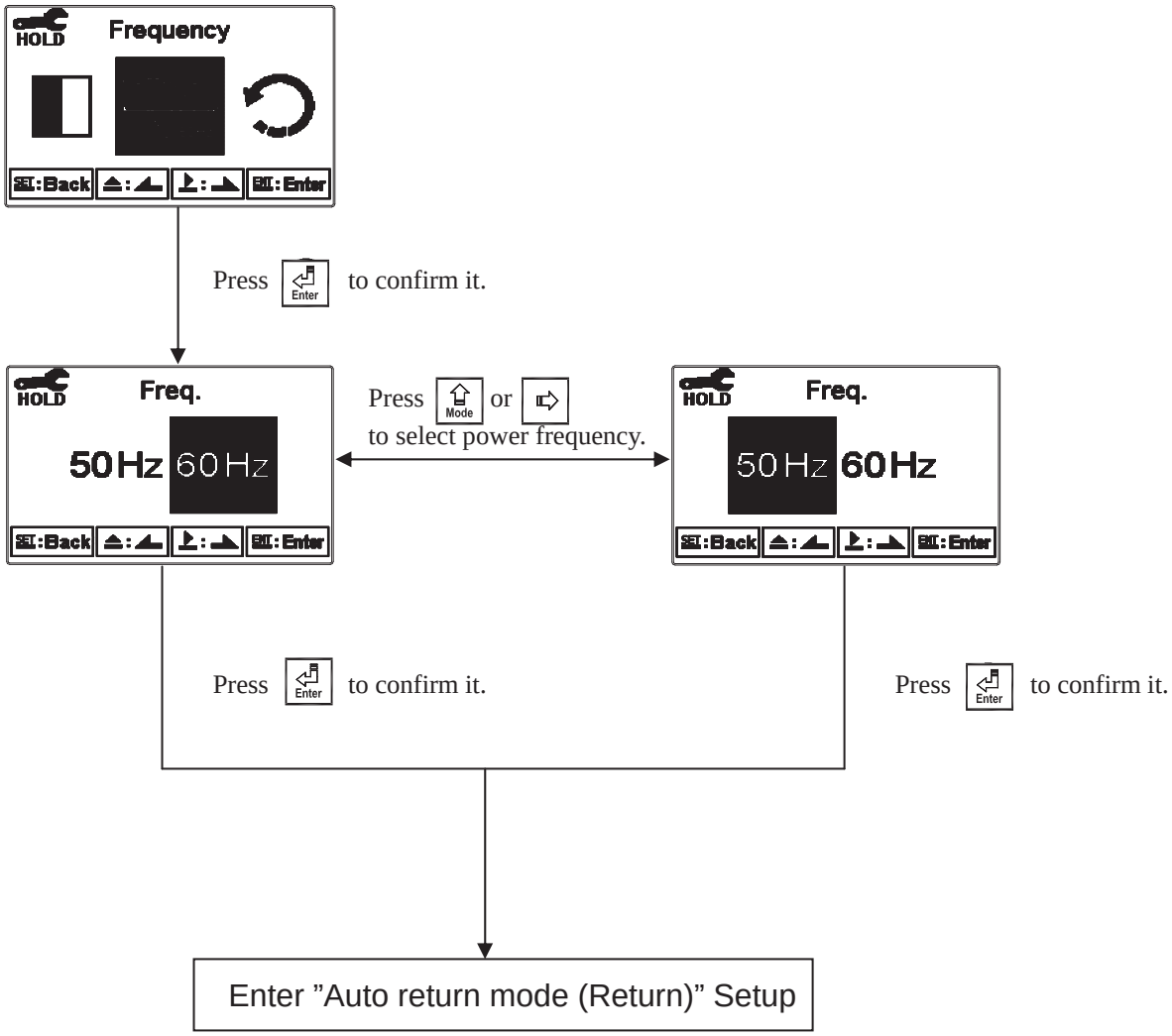

6.18 Return

Enter setup of auto return mode (Return) to set the function that the instrument automatically exit the setup menu after a period of time without pressing any key. The “Manual Exit” means that it needs to exit setup menu manually, while “Auto” means that the display automatically exit the setup menu and back to measurement mode after a period of time without pressing any key.

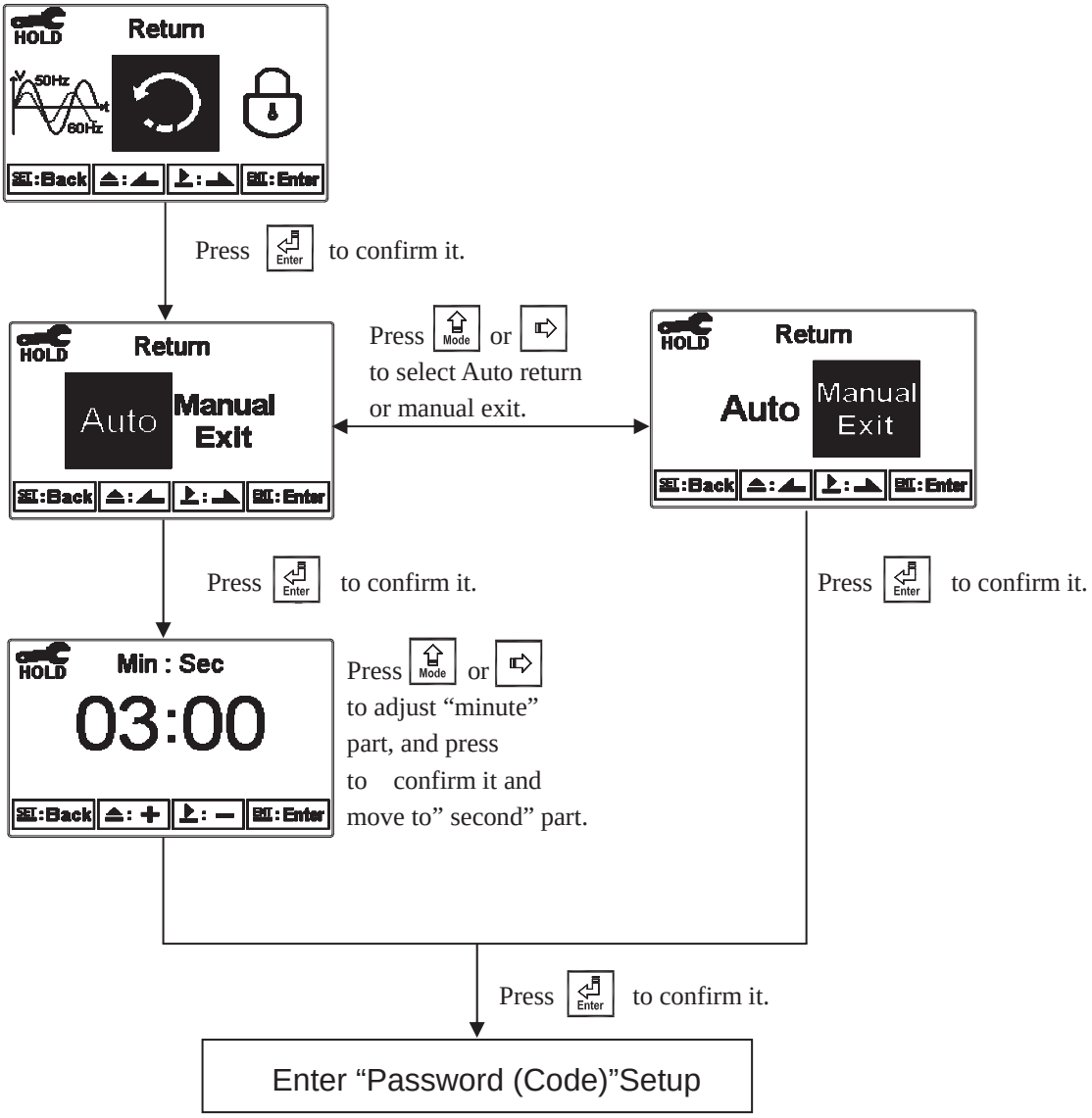

7. Calibration

Block diagram of Calibration

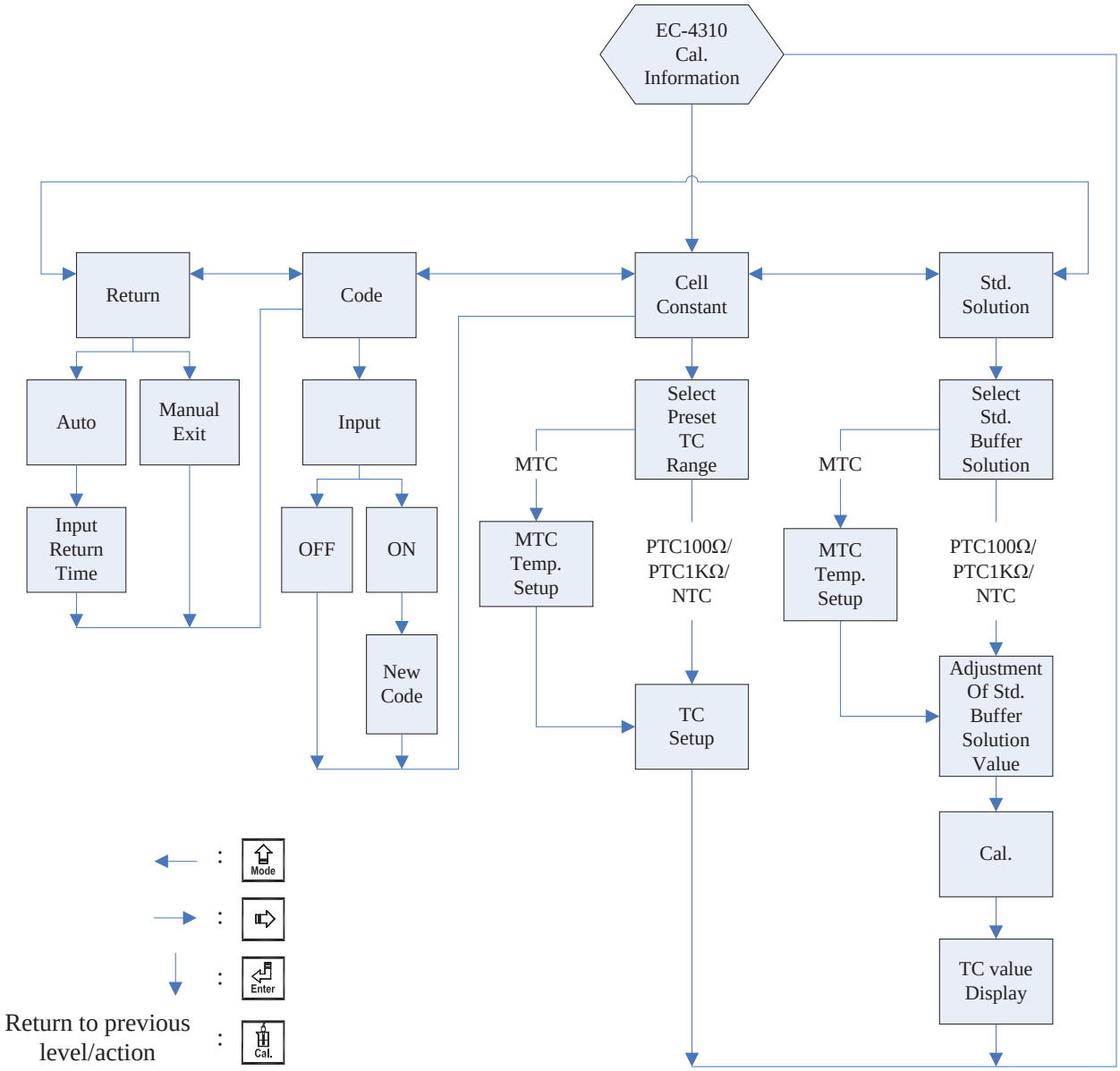

7.1 Enter calibration setup menu

In the measurement mode, pressing the two keys [Cal.] and [Mode] simultaneously allows you enter the Calibration Information. If you do not need to re-calibrate the measurement system, press [Cal.] to go back to measurement mode. If you need to re-calibrate the system, press [Enter] to enter into the calibration setup menu. (If the calibration time shows “OFF”, it represents that the clock function has been turned off.)

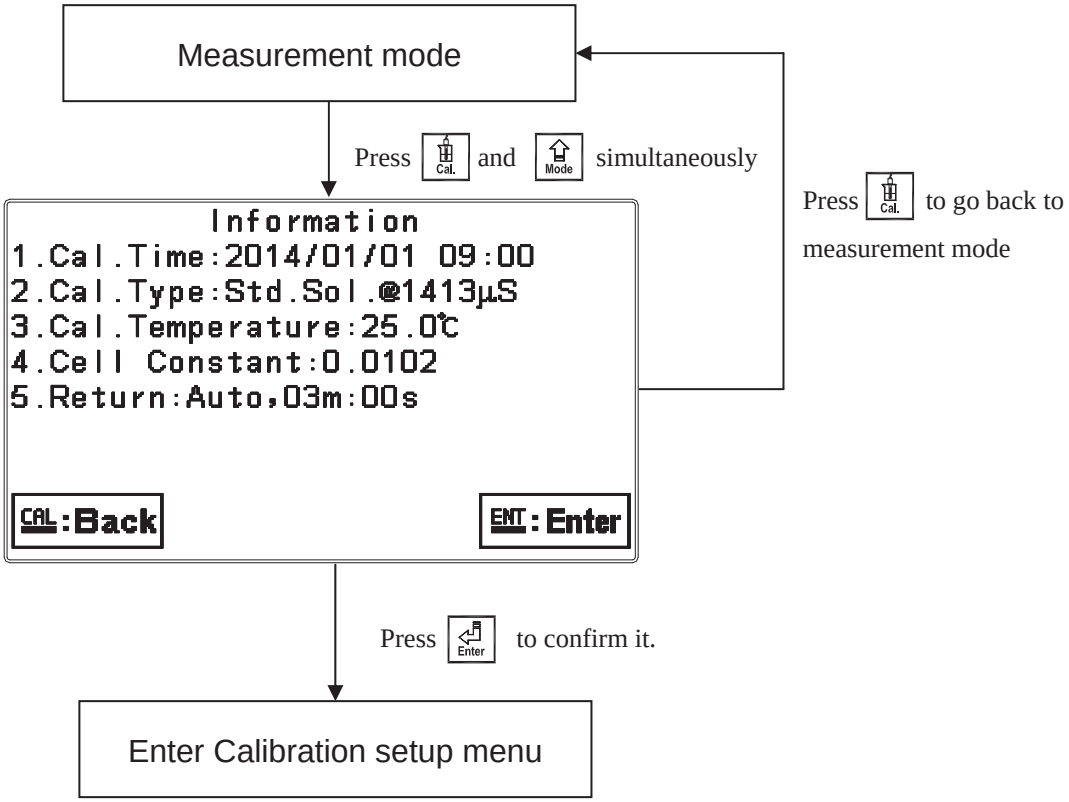

7.2 Security password of calibration (Code)

Select the Code (password) icon after entering calibration setup mode. Select to activate code function or not. **The default Calibration setting code is “1100”.**

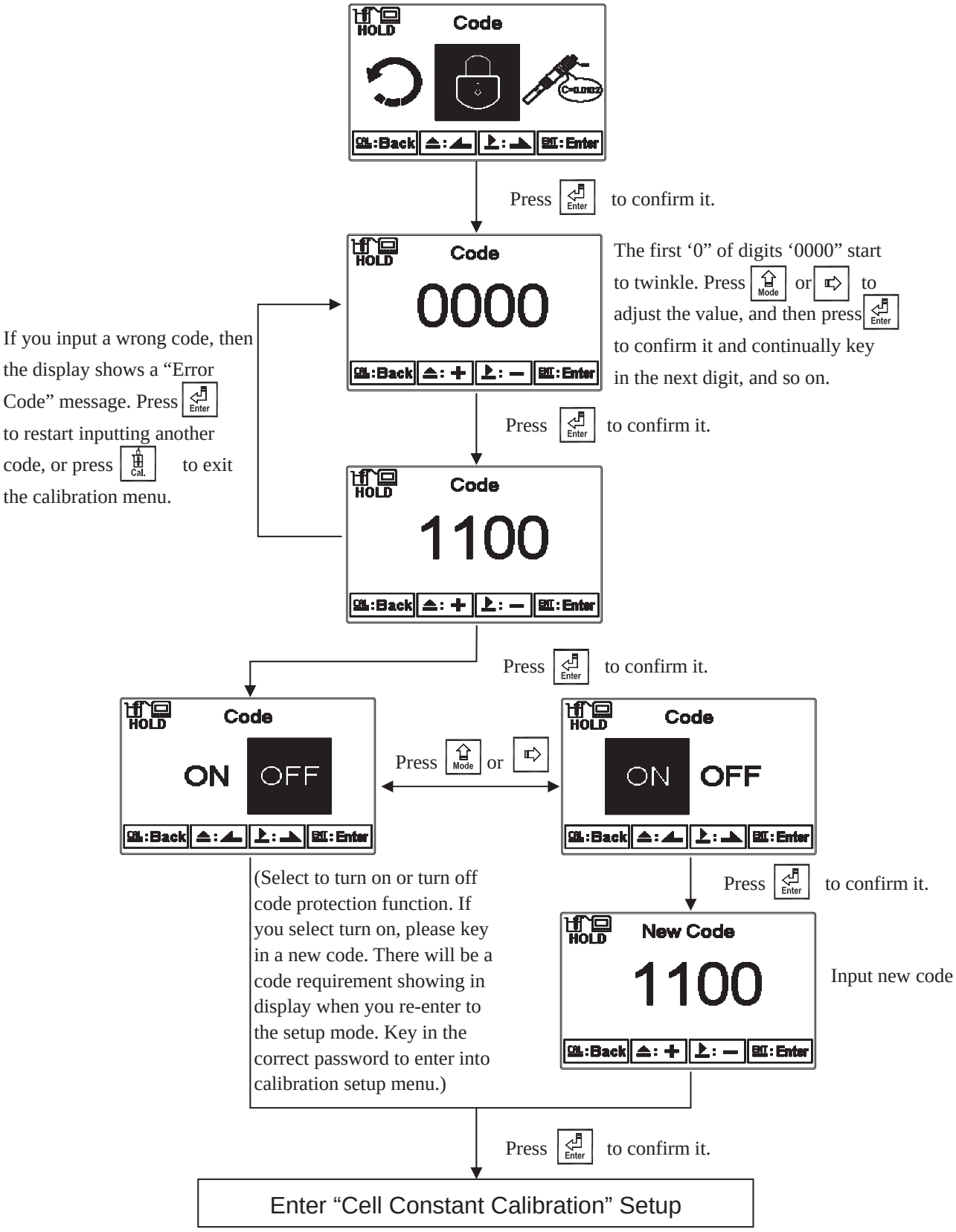

7.3 Cell constant calibration

7.3.1 Resistivity (Res.)

Enter setup of cell constant to directly set cell constant. Press [Mode] or [⇨] to select the preset value to near an appropriate one. There are three sets of preset value (0.01, 0.05, 0.10). Select the most appropriate cell constant value and press [Enter] to confirm it and enter to the next screen. At the time, the cell constant starts to twinkle. Press [Mode] or [⇨] to adjust the cell constant value. Correct the measurement value to known standard solution value by adjust cell constant, or set the known cell constant directly. Press [Enter] to confirm it.

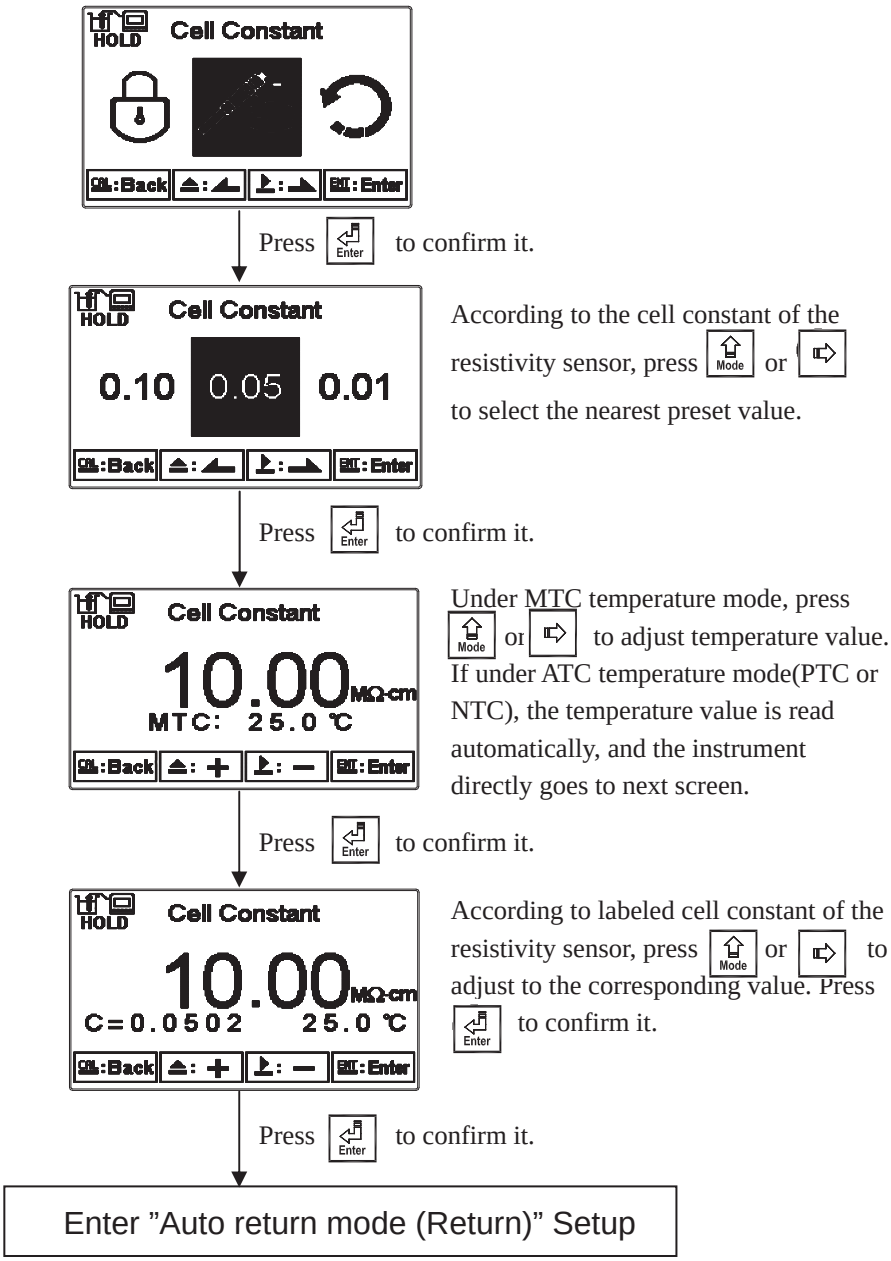

7.3.2 Conductivity (Cond.)

Enter setup of cell constant to directly set cell constant. Press [Mode] or [⇨] to select the preset value to near an appropriate one. There are four sets of preset value (0.01, 0.10, 0.50, 10.00). Select the most appropriate cell constant value and press [Enter] to confirm it and enter to the next screen. At the time, the cell constant starts to twinkle. Press [Mode] or [⇨] to adjust the cell constant value. Correct the measurement value to known standard solution value by adjust cell constant, or set the known cell constant directly. Press [Enter] to confirm it.

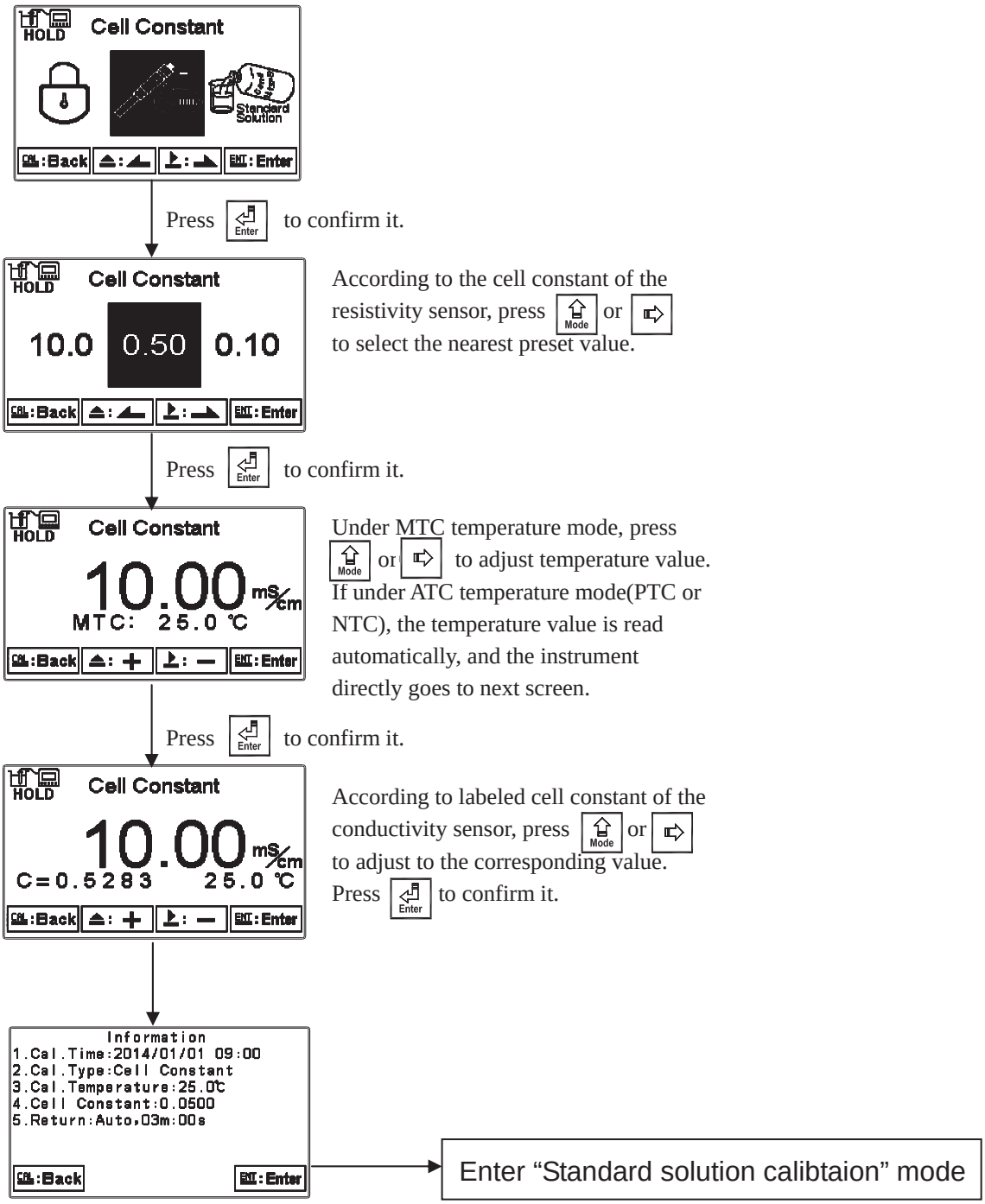

7.4 Standard solution calibration (Std. Solution)

Applying known standard solution for calibration is only suitable for conductivity measurement mode. Press [Mode] or [⇨] to select from preset standard solution value. There are three preset value from 84.0μS/cm, 1413μS/cm, to 12.88mS/cm. After selecting proper preset value, put the cleaned conductivity sensor into standard solution, and press [Enter] to enter the calibration screen. At the time, the conductivity value can be adjusted according to standard solution value. Press [Enter] to initiate the calibration. The display shows the sign ⌛, and it starts the auto calibration procedure. After finishing calibration, the display automatically shows the cell constant after calibration. Press [Enter] to exit.

Note: there is a temperature range limit within 0℃～31℃ for "Std. Solution Calibration". If exceeding the range, please refer to "7.3.2 Cond. Cell Constant Mode" for calibration.

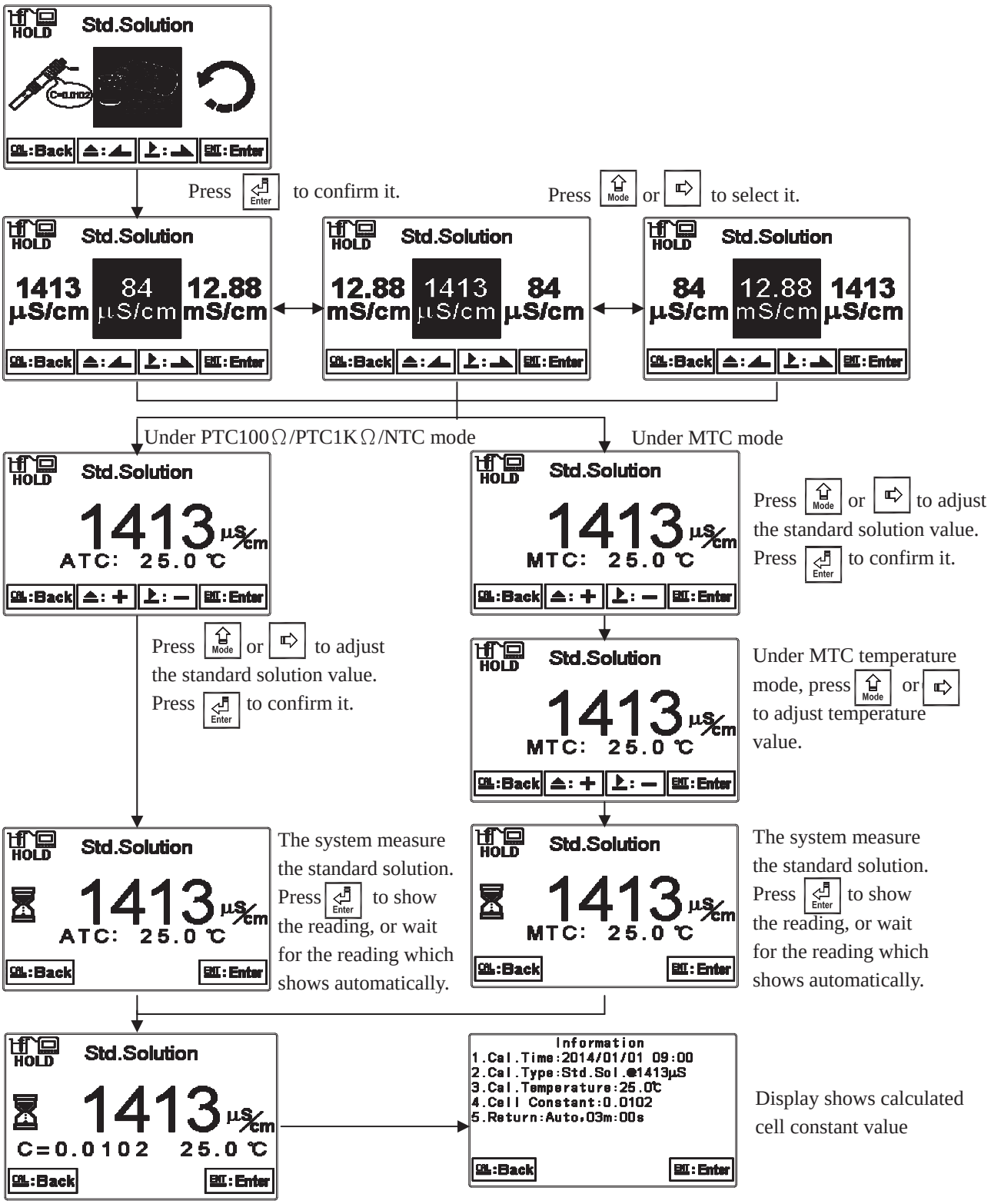

7.5 Return

Enter setup of auto return mode (Return) to set the function that the instrument automatically exit the setup menu after a period of time without pressing any key. The “Manual Exit” means that it needs to exit calibration setup menu manually, while “Auto” means that the display automatically exit the calibration setup menu and back to measurement mode after a period of time without pressing any key.

Note: The return function of setup menu and calibration setup menu are independent settings.

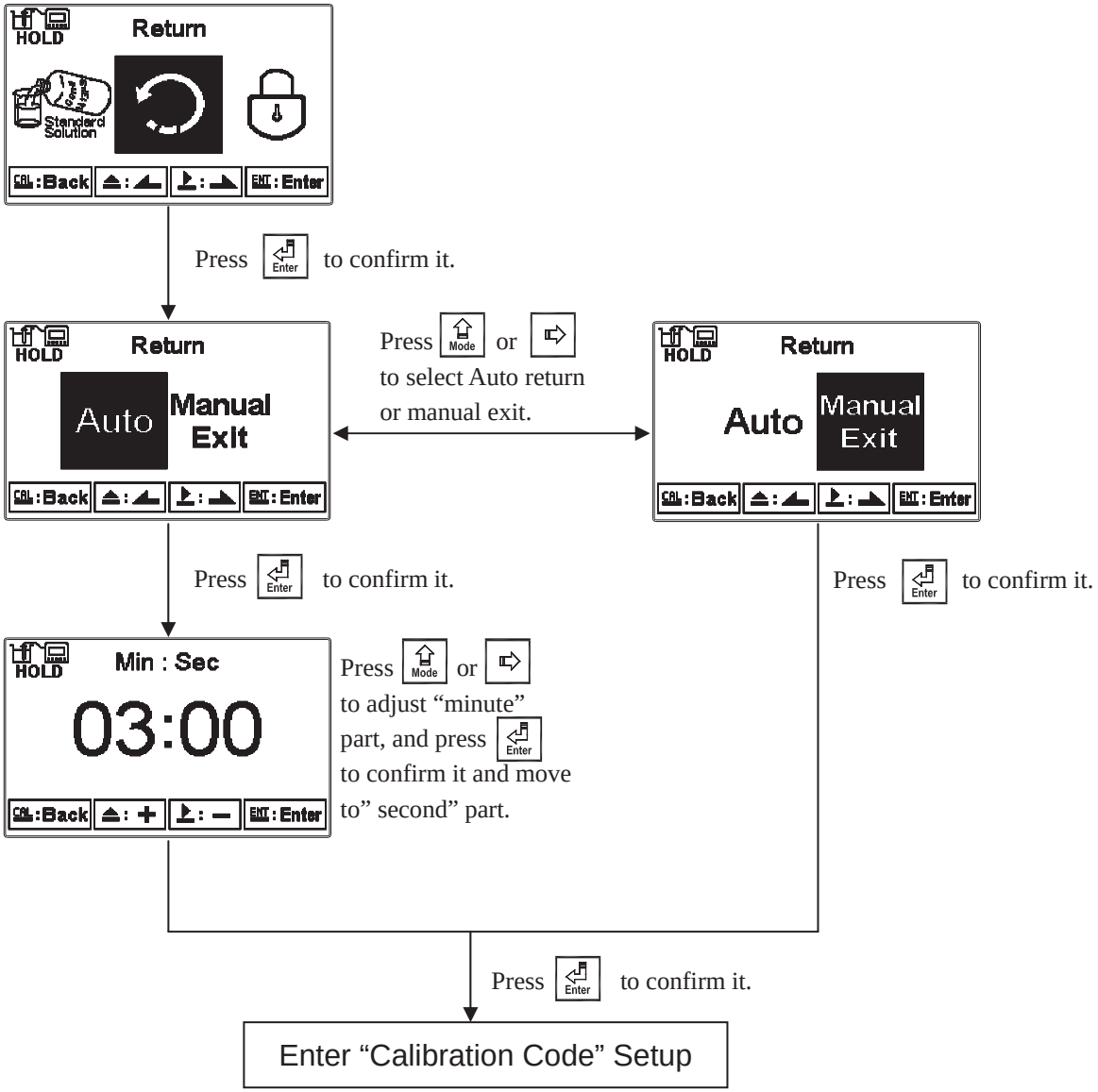

8. Error messages (Error code)

Messages	Reason	Dispositions
Error1	The readout is unstable when calibration	1. Replace with new standard solution 2. Maintain the electrode or replace a new electrode, and make another calibration
Error2	1. Cell constant of the electrode exceeds the upper or lower limit 2. Exceed temperature range	1. Replace with new standard solution 2. Maintain the electrode or replace a new electrode, and make another calibration
Error3	Wrong password **ERROR CODE**	Re-enter a password
Error5	Serious error that does not permit any further measuring	Please call service engineer.

9. Installation of cells

9.1 Appearance of cells

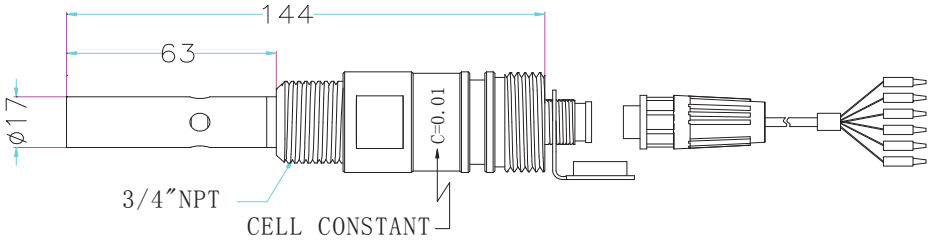

8-221/ 8-222 cell dimensions

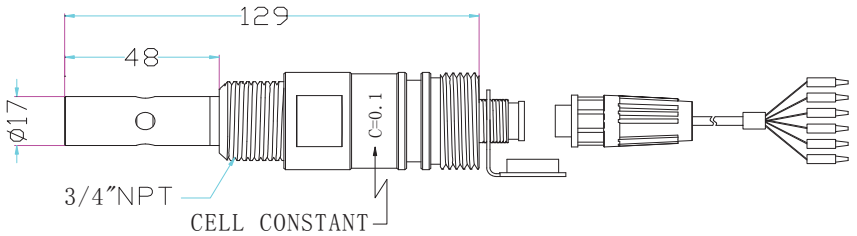

8-223 cell dimensions

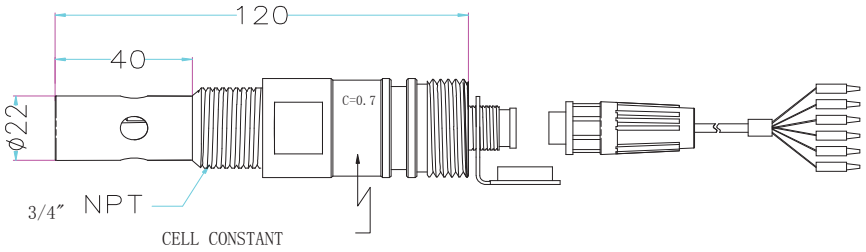

8-241 / 8-241-01 / 8-242 cell dimensions

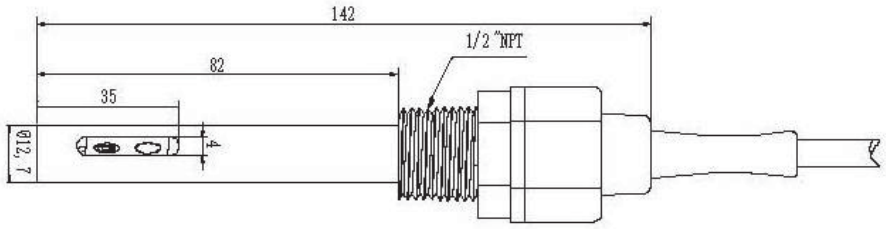

8-244 cell dimensions

9.2 Correct installation

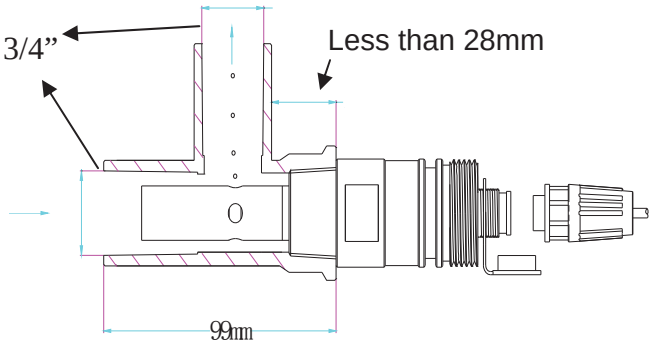

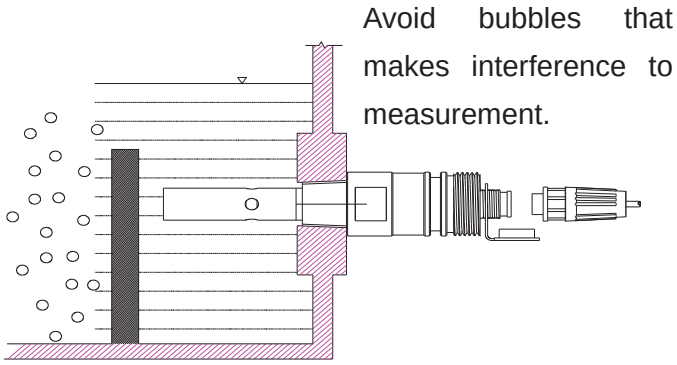

9.3 Incorrect installation

9.3.1 Insufficient immersion: The installation is easy to result in stagnant water inside the cell and thus lead to measurement error.

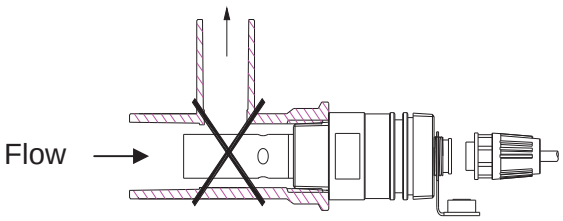

9.3.2 Insufficient water flow: The installation is prone to error measurement due to insufficient water flow.

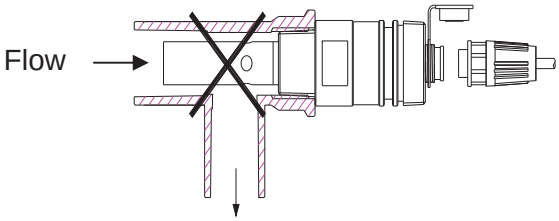

9.3.3 Insufficient immersion: The installation is easy to result in stagnant water inside the cell and thus lead to measurement error.

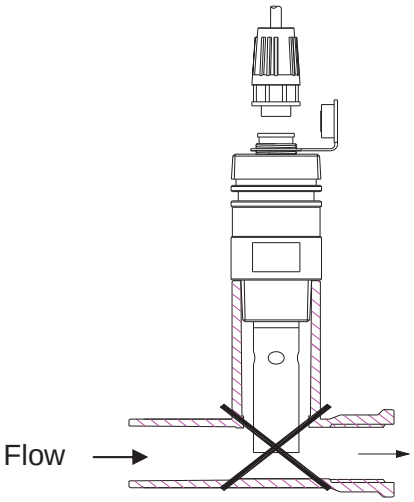

Appendix: Calibration Solution

℃ Conductivity	84 μs@25℃	1413 μS@25℃	12.88mS@25℃
0		776	7.15
5	65	896	8.22
10	67	1020	9.33
15	68	1147	10.48
16	70	1173	10.72
17	71	1199	10.95
18	73	1225	11.19
19	74	1251	11.43
20	76	1278	11.67
21	78	1305	11.91
22	79	1332	12.15
23	81	1359	12.39
24	82	1386	12.64
25	84	1413	12.88
26	86	1440	13.13
27	87	1467	13.37
28	89	1494	13.62
29	90	1521	13.87
30	92	1548	14.12
31	94	1575	14.37

SUNTEX

SUNTEX INSTRUMENTS CO., LTD.

13F, No. 31, Lane 169, Kangning St.,
Xizhi Dist., New Taipei City, Taiwan (R.O.C.)
Tel: 886-2-2695-9688
Fax: 886-2-2695-9693
e-mail: suntex@ms1.hinet.net

www.suntex.com.tw/en

5040C EC-4310/Technical data subject to alternations/ Quality Systems ISO 9001/201404