EC-4110RS Intelligent Conductivity Transmitter

Operation Manual

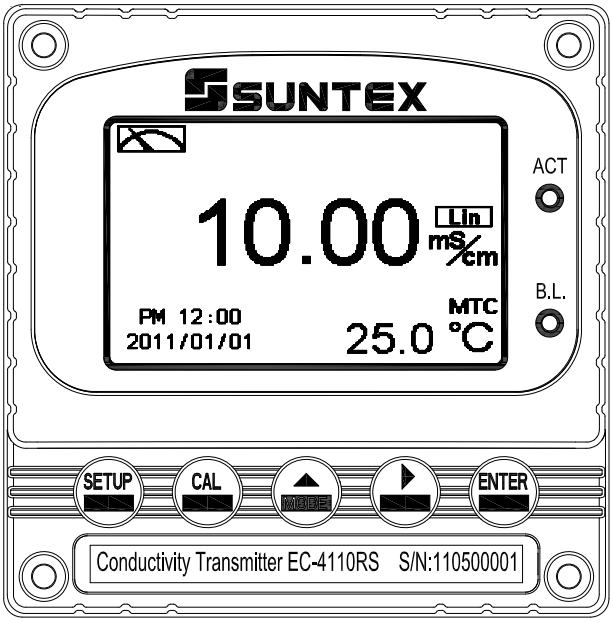

SUNTEX

Precautions for installation

Wrong wiring will lead to breakdown or electrical shock of the instrument, please read this operation manual clearly before installation.

- Make sure to remove AC power from the controller before wiring input, output connections, and remove it before opening the controller housing.
- The installation site of the controller should be good in ventilation and avoid direct sunshine.
- The material of signal cable should be special coaxial cable. Strongly recommend using our coaxial cable. Do not use normal wires instead.
- Avoid electrical surge when using power. Especially when using three-phase power, use ground wire correctly.
- The internal relay contact of the instruments is for alarm or control function. Due to safety, please must connect to external relay which can stand enough ampere to make sure the safety operation of the instruments.（Please refer to chapter 3.6 “Illustration of electrical connection”）

CONTENTS

Brief Instruction

Description of set-up settings (see chapter 7 for details)

Press SETUP and MODE simultaneously to see the overview of the set-up settings now. Then press ENTER if you would like to modify set-up settings. Press keypad according to index of keypad on the screen.

Index of keypad

keypad	Accordingly item	Description
SETUP	SET:Back	Back to upper layer
MODE	▲: ◢	Choose leftward of change to left page
	▲: +	Increase digit
▶	▶: ◣	Choose rightward of change to right page
	▶: −	Decrease digit
ENTER	ENT: Enter	Confirm settings after modifications and then go through next step

Selection of set-up items

keypad	Accordingly item	Description
Mode		Measurement mode, to choose Resistivity (Res) or Conductivity (Cond) measurement
Temperature	°C	Temperature measurement and compensation, including MTC, PTC, NTC (3 types total). MTC---Manual temperature compensation, PTC/NTC--- auto temperature compensation
Relay 1	1	First relay setting, to choose action off or Hi/Lo alarm
Relay 2	2	Second relay setting, to choose action off or Hi/Lo alarm
Clean		Automatic wash time setting, to choose electrode clean equipment's ON and OFF duration
Analog 1	S Ω -mA	Current output according to Res or Cond setting range
Clock		Clock setting **(When out of power and reboot it, the instrument's time setting can maintain to the real time. If**

		not, please replace the inner 3V CR2025 battery.)
RS-485		RS485 serial interface (Modbus protocol)
Black-light		Backlight setting, to set Auto/ON/OFF backlight, brightness, and sensitivity
Contrast		Contrast of screen setting
Logbook		Event recorder logbook (50 data)
Digital Filter		Take every serial 1~60 measurements, average them continuously, and make it as the readings
Return		Setting of returning to the measurement mode
Language		Available for English, Traditional Chinese, Simplified Chinese
Code		Security code of set-up mode. The factory default is 1111, and a designated user can change the code. The set-up code is precedential to calibration code, thus it can pass a different security code of calibration.

Description of calibration settings (see chapter 8 for details)

Press CAL and MODE simultaneously to see the last calibration information. Then press ENTER if you would like to make a new calibration or modify setting of calibration. Press keypad according to index of keypad on the screen.

Index of keypad:

keypad	Accordingly item	Description
CAL	CAL:Back	Back to upper layer
MODE	▲: ◢	Choose leftward of change to left page
	▲: +	Increase digit
▶	▶: ◣	Choose rightward of change to right page
	▶: −	Decrease digit
ENTER	ENT: Enter	Confirm settings after modifications and then go through next step

Selection of calibration items (up to three-point calibration)

keypad	Accordingly item	Description
Code		Security code of calibration mode. The factory default is 1100.
Return		Time interval setting of returning to the measurement mode
Cell Constant	CELL Const.	To adjust the instrument cell constant setting until the value the same with the given cell constant of the sensor
Solution	Std. Sol.	Use the appropriate standard solution to calibrate the system

Note

SUNTEX reserves the right to change the figure of icons and contents. The actual icons and contents please refer to the instruments.

1. Specifications

Model		EC-4110RS
Measuring modes		Resistivity/Conductivity/Temp.
Ranges	Resistivity	0.00 MΩ·cm~20.00 MΩ·cm
	Conductivity	0.00 μS/cm~200.0 mS/cm manual or auto range selectable
	Temp.	-30.0~130.0˚C
Resolutions	Resistivity	0.01 MΩ·cm
	Conductivity	0.01 μS/cm
	Temp.	0.1˚C
Accuracy	Resistivity	±1% ± 1Digit
	Conductivity	±1% ± 1Digit
	Temp.	±0.2˚C± 1Digit
Temperature Compensation		NTC30KΩ or PT1000 or Manual temperature compensation selectable
Calibration mode		(1)Cell constant adjustment (2)Standard solution calibration
Ambient Temp.		0~50 ˚C
Storage Temp.		-10~70 ˚C
Cell Constant		0.01, 0.05, 0.1, 0.5, 10.00 cm^{-1} fixed, freely selectable 0.008~19.99 cm^{-1}
Temperature Coefficient		Linear temperature compensation from (0.00%~ 40.00%) and Non-Linear compensation
Display		Large LCD display with environment light sensor auto/manual illumination function
Analog output 1		Isolated DC 0/4~20mA corresponding to main measurement, max. load 500Ω
Serial interface		RS-485 (Modbus RTU or ASCII)
Logbook		50 events records
Settings	Contact	RELAY contact，240VAC 0.5A Max.(recommend)
	Activate	Two sets of individual HIGH or LOW programmable control
Wash		RELAY contact: ON 0~99min. 59sec. / OFF 0~999hr 59min.
Certification		IP65 (NEMA 4X)
Power Supply		100V~240VAC±10%，50/60Hz，5W max.
Installation		Wall or Pipe or Panel Mounting
Dimensions		96m × 96mm × 132mm (H×W×D)
Cut off Dimensions		93 mm × 93 mm (H×W)
Weight		0.5Kg

2. Assembly and installation

2.1 Transmitter installation: This Transmitter can be installed through panel mounting, wall mounting and pipe mounting.

Installation of panel mounting: First, prepare a square hole of 93 x 93mm on the panel box, and then insert the controller directly into the panel box. Insert the accessorial mounting bracket from the rear, and make it be fixed in to pickup groove.

2.2 Illustration of panel mounting:

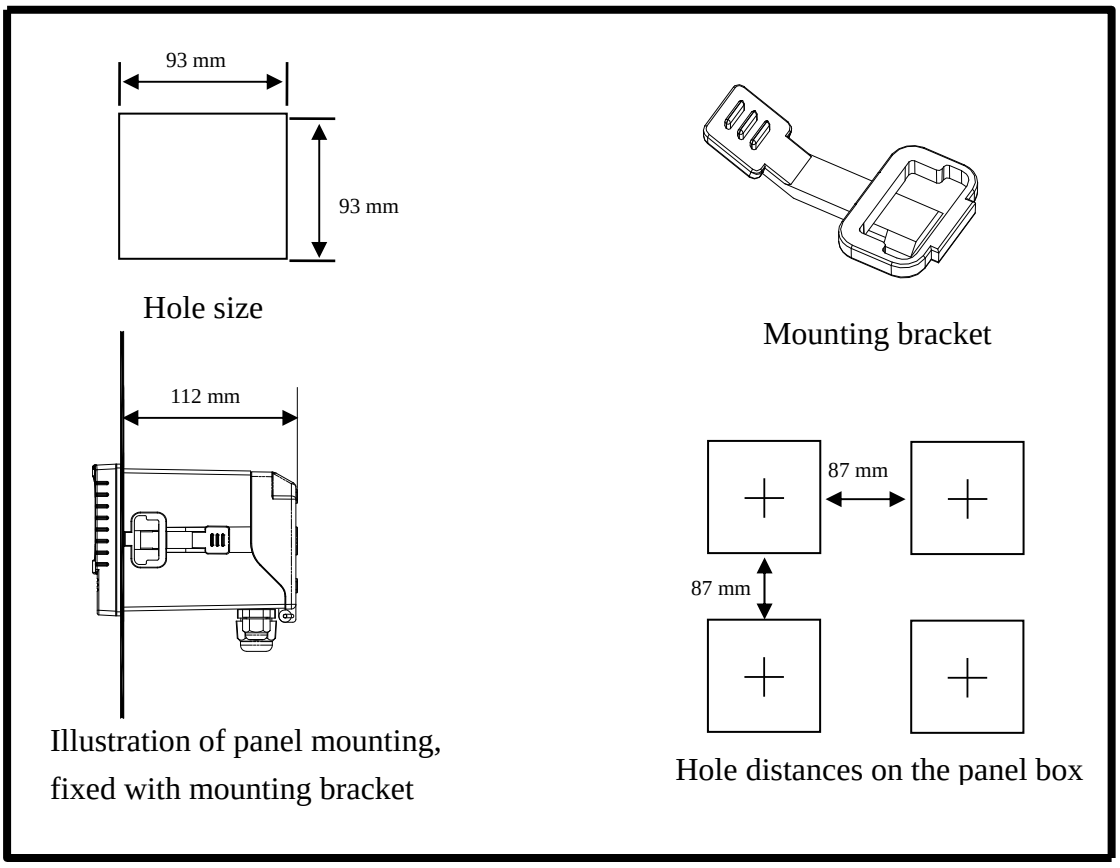

2.3 Illustration of Wall mounting and pipe mounting

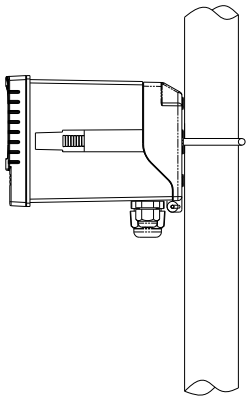

Installation of pipe mounting
Fixed with U-shaped pipe clip. The distance between screw holes is 60mm

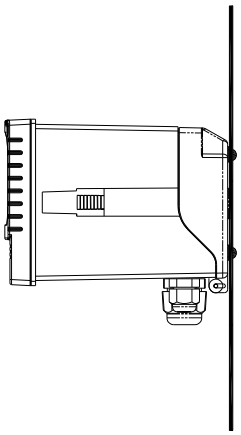

Installation of wall mounting
Fixed with 4 x M4 screws

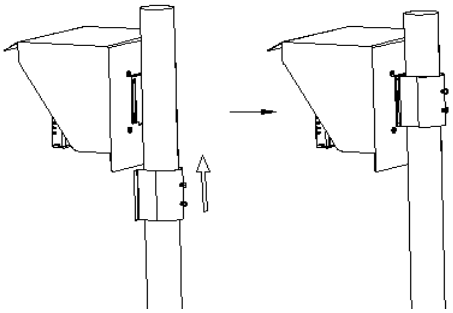

Sun Shield (Pipe mounting)
(Optional)

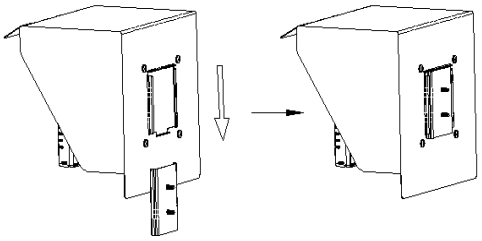

Sun Shield (Wall mounting)
(Optional)

3. Overview of Conductivity transmitter EC-4110RS

3.1 Illustration of rear panel:

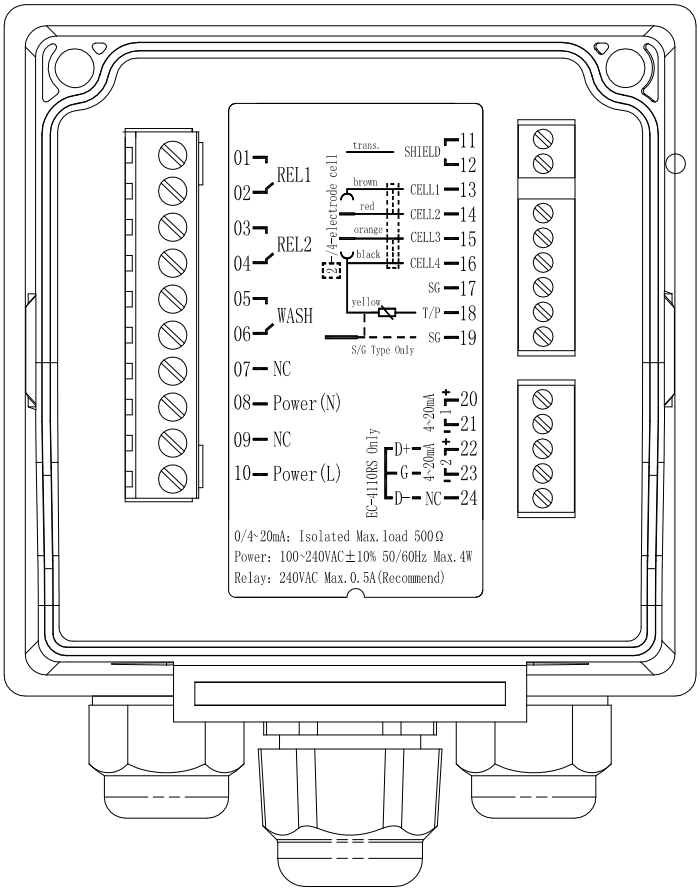

3.2 Illustration of terminal function:

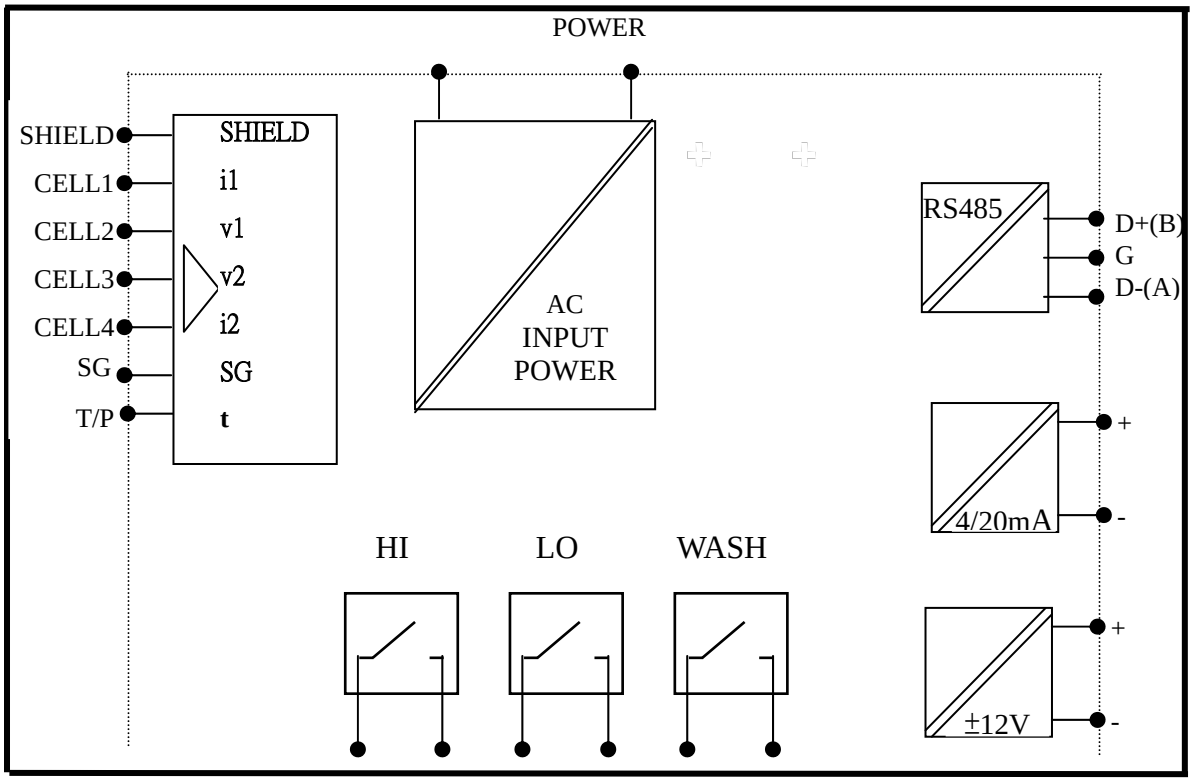

3.3 Description of terminal function:

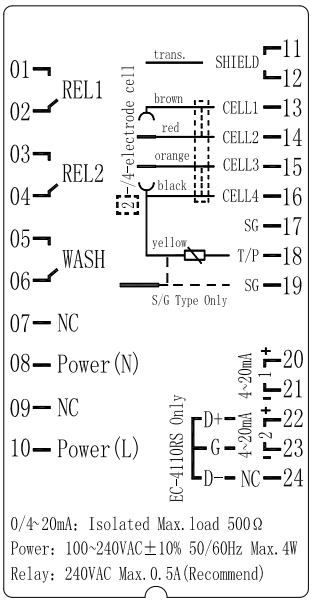

01 02 — **REL1**：External relay terminal first control

03 04 — **REL2**：External relay terminal second control

05 06 — **WASH**：External wash relay terminal

07 — **NC**：None contact

08 — **100~240AC**：Power supply terminal

09 — **NC**：None contact

10 — **100~240AC**：Power supply terminal

11 12 — **SHIELD**：The transparent cell connection line

13 — **CELL1**：The cell connection line: Current electrode 1

14 — **CELL2**：The cell connection line: Voltage electrode 1

15 — **CELL3**：The cell connection line: Voltage electrode 2

16 — **CELL4**：The cell connection line: Current electrode 2

17 — **SG**：**NC**

18 — **TP**：Connect the cell connection line of temperature probe

19 — **SG**：**NC**

20 — **4~20mA＋terminal**：Master measurement current output terminal +, for external recorder or PLC control

21 — **4~20mA－terminal**：Master measurement current output terminal -, for external recorder or PLC control

22 — **4~20mA＋terminal / D+(B)**： D+(B) of RS-485 output

23 — **4~20mA－terminal / G**：GND of RS-485 output

24 — **NC / D-（A）**：D-(A) of RS-485 output

3.4 Wiring of cable

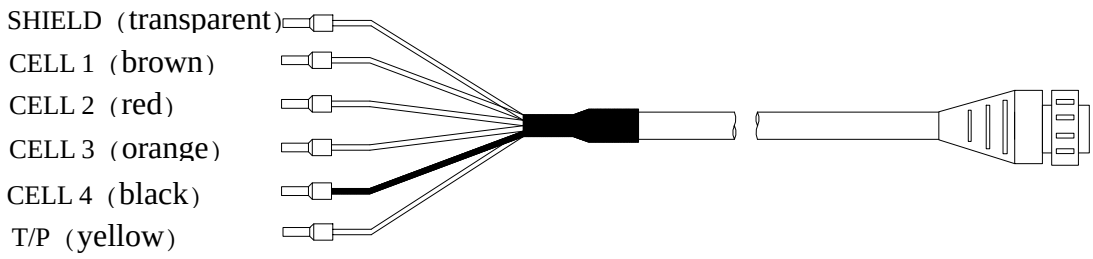

3.5 Circuit of cable

	SUNTEX Conductivity Cell			Others
Terminal sign	2 Electrode Cell 8-221/8-222/8-223 4-Electrode Cell 8-241/8-241-01/8-242	Fixed Cable Resistivity Cell 8-11-3 8-11-4	Fixed Cable Conductivity Cell 8-12-6 8-12-7	Please read the instruction of the cells
SHIELD	Transparent line	Net line	Net line	SHIELD
CELL 1	Brown line	Short with transparent line	Short with transparent line	Current electrode 1
CELL 2	Red line			Voltage electrode 1
CELL 3	Orange line	Short with white line	Short with green line	Voltage electrode 2
CELL 4	Black line			Current electrode 2
T/P	Yellow line	Yellow line	Red line	T/P(the other side for CELL 3

Note: If use other brand's two electrode cell, the circuit of cable is the same with that for 8-11-3 or 8-12-6 cell.

3.6 Illustration of electrical connection:

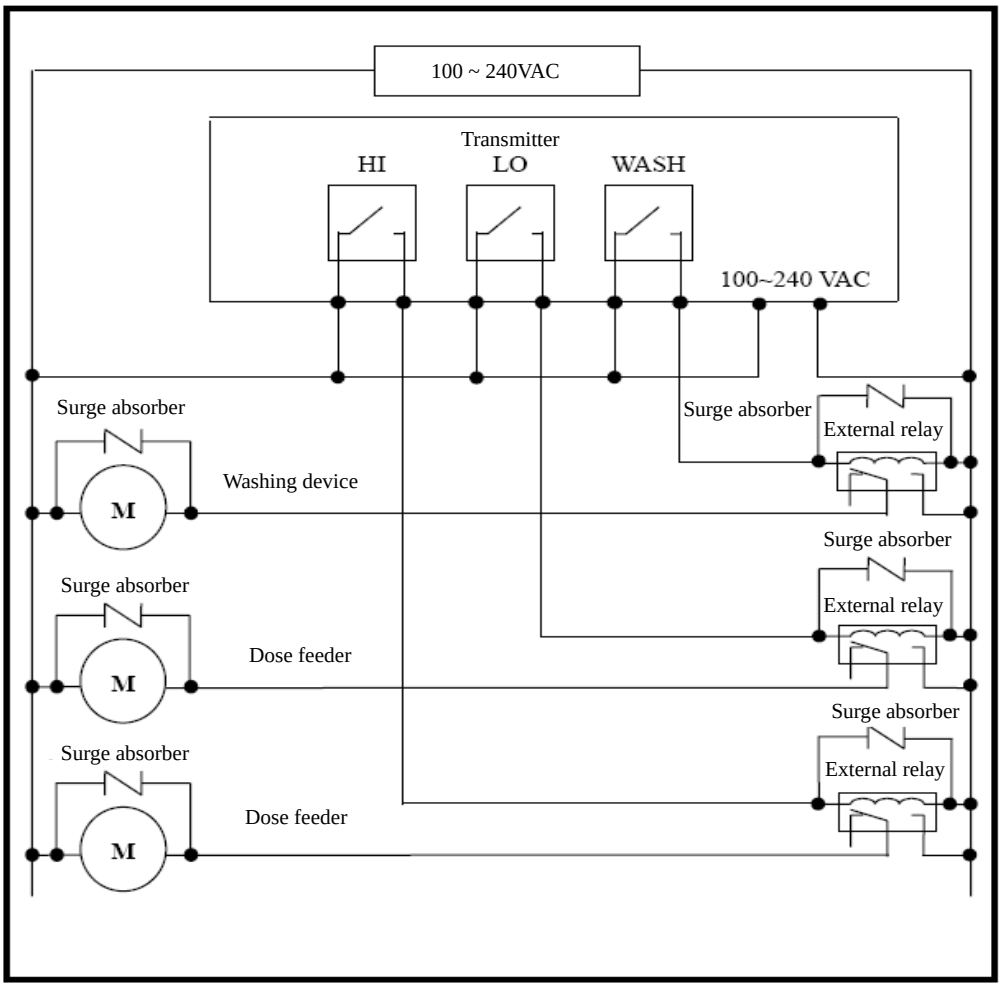

4. Configuration:

4.1 Illustration of front panel:

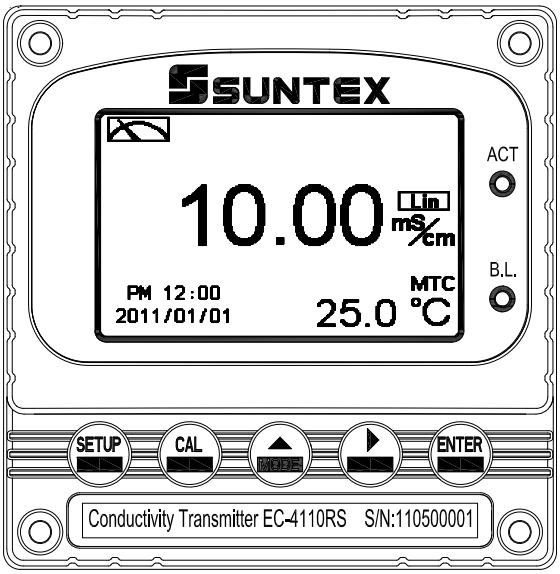

4.2 Keypad:

In order to prevent inappropriate operation by others, before the parameter setting and calibration, the operation applies multi-keys, and coding protection if necessary. Description of the key functions is in the following:

SETUP：In the parameter set-up mode, pressing this key allows you exit parameter set-up mode and back to Measurement mode.

CAL：In the Calibration mode, pressing this key allows you exit Calibration mode and back to Measurement mode.

MODE：
1. In the parameter set-up mode and Calibration mode, pressing this key to select leftward or change to another page.
2. When adjusting value, press this key to increase the value.

：
1. In the parameter set-up mode and Calibration mode, pressing this key to select rightward or change to another page.
2. When adjusting value, press this key to decrease the value.

ENTER：Key for confirmation; pressing this key is essential when modifying data value or selecting the parameter setting items in the window.

4.3 LED indicators:

ACT：Washing device operation indicator and controlling operation indicator (Relay 1、Relay 2)

B.L. : Light sensor; in the automatic display backlit mode, the lamp will light or go out as the change of environmental brightness.

5. Operation

5.1 Measurement mode:

After all electrical connections are finished and tested, connect the instrument to the power supply and turn it on. The transmitter will automatically entering measurement mode with the factory default settings or the last settings from user.

5.2 Set-up menu:

Please refer to the set-up instructions in Chapter 6. Press SETUP and MODE simultaneously to enter into set-up menu, and press SETUP to go press to back to measurement mode.

5.3 Calibration menu:

Please refer to the calibration instructions in Chapter 7. Press CAL and MODE simultaneously to enter into calibration menu, and press CAL to go back to measurement mode.

5.4 Shortcuts:

1. In the measurement mode, if selecting MTC for temperature compensation mode, you may press MODE and ▶ to adjust MTC temperature value.
2. In the measurement mode, press SETUP continuously for 2 seconds to check Event Logbook, press SETUP again to back to measurement mode.
3. In the measurement mode, press MODE continuously for 2 seconds to switch display mode from normal display to real-time chart mode or to trace mode.

5.5 Reset:

5.5.1 Master reset:

Measurement mode: Conductivity, Auto-Range
Temperature compensation: MTC 25℃
Temperature Coefficient: Lin, 2.00%
Relay 1：High point alarm: AUTO, SP1= 100.0mS，DB=10.0mS
Relay 2：Low point alarm: AUTO, SP2 =10.0 mS，DB= 1.00 mS
Wash time: OFF
Analog 1 current output (Cond/Res)：4~20 mA，0.00~199.9mS
Analog 2 current output (Temp)：(Temp)：4~20 mA，0~100.0℃
Display backlit: OFF
Contrast: 0
Code: OFF
Date & Time：2010/1/1 00:00:00
Auto back: Auto

5.5.2 Calibration reset:

Cal Time：2010/01/01
Cal Type：No Cal
Cell Constant：0.5000
Cal Temp.：none
Auto back: Auto

Note: The factory default of calibration presetting is “No Cal”, and the cell constant setting is “0.5000”. It means that the user has not calibrated the sensor with the transmitter yet. When selecting standard solution to finish calibration, the display shows cell constant of the cell and the value of the standard solution.

6. Measurement display mode

6.1 Normal mode

The normal mode is for digit display, the content is as the following illustration. It mainly includes main measurement value and unit, temperature measurement value and unit, temperature compensation mode, and clock display.

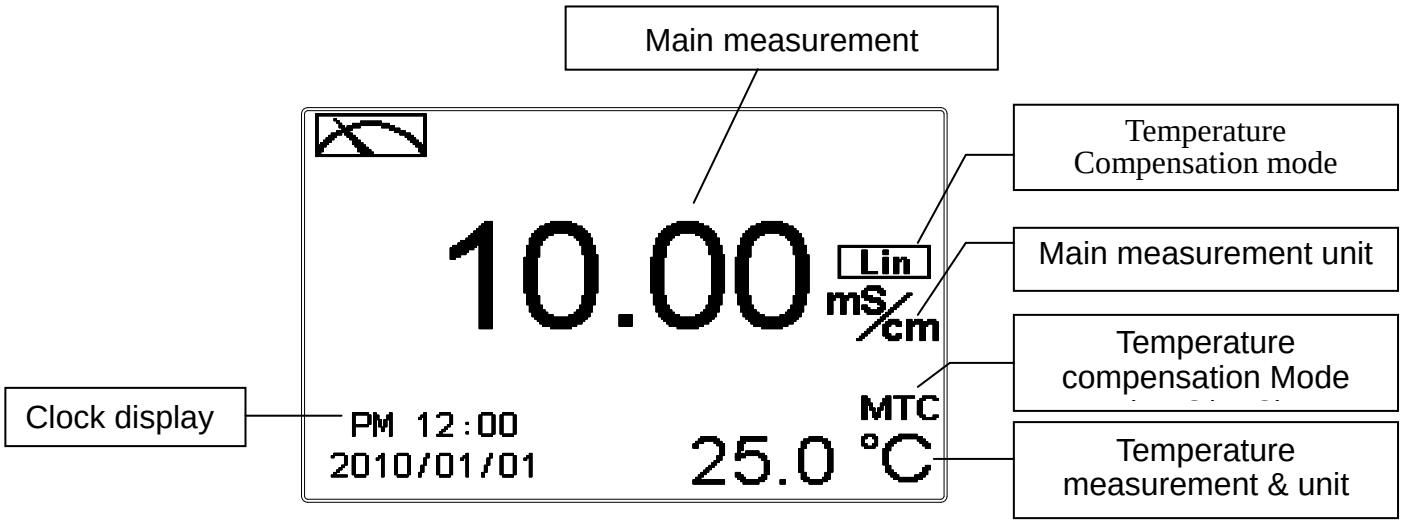

6.2 Real-Time Chart mode

Real-time chart mode is for dynamic display of real-time graphics. The duration is about three minutes of the recent changes in measured values of the curve. Users can set the mode to its corresponding Cond/Res measuring range (see section 7.4). The smaller the range is set, the higher resolution of the display is. When entering setup or calibration mode and returning to measurement mode, the real-time graphic will be re-updated. When the measured value exceeds a set range of the upper and lower limit, the graphics will be presented in the upper and lower limits dotted line. Real-time chart mode display is shown as below. There are also real-time measurement value, & unit, and temperature value & unit which are displayed in the bottom of the screen. The timeline in real-time graphic is divided into 12 depict, which is describe the range of representatives of each of 1 / 4 minutes (15 seconds).

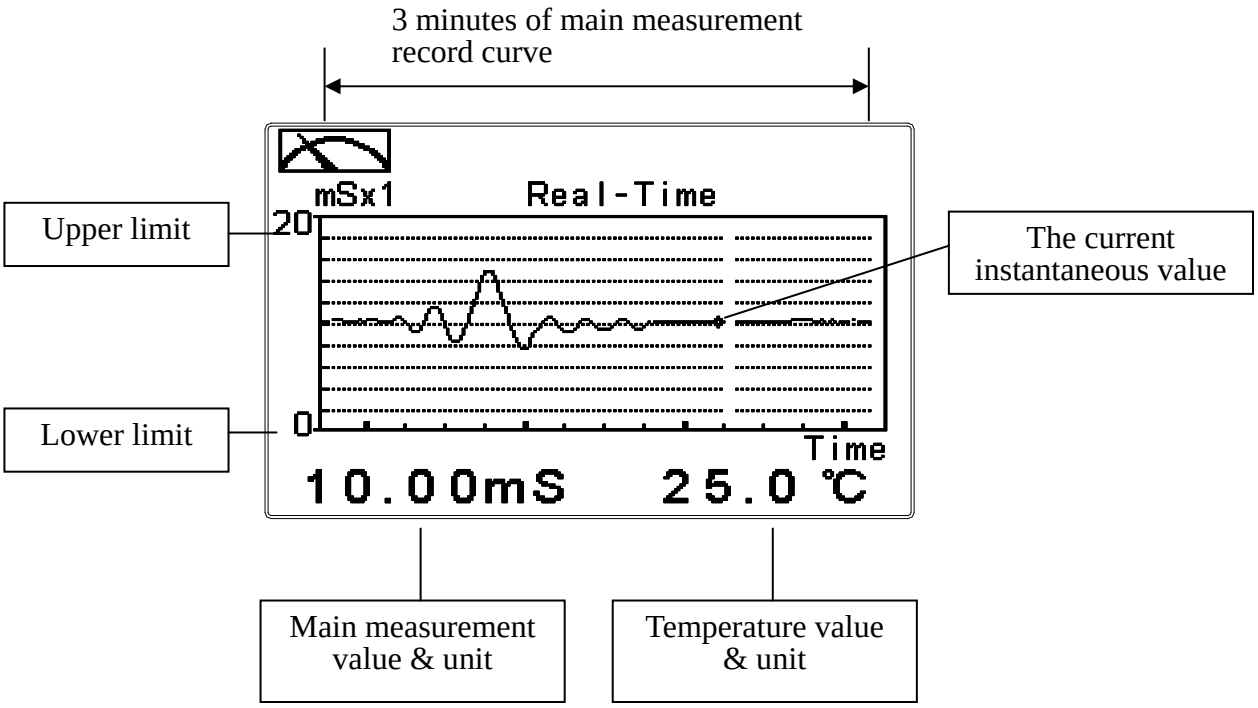

6.3 Trace mode

The feature of the trace mode is the record duration which can be set by the user (range from three minutes, up to four weeks). The trend graphic records the measurements in the past T time. The trend is recorded by the 60 group structure. Hence, each group of units is recorded in T/60 time interval. The trend line is constructed by all value data which is calculated to the average (Mean Value), maximum (Max Value) and minimum (Min Value) form. When the latest T/60 record shows in the rightmost of the trend graphic, all the previous record will be moved to the left side of the graphic. For example, T is set to 60 hours, then each set of records will be calculated to the average, the maximum, the minimum values after one hour(T/60 = 1), each time interval. Timeline of trends which is divided into 12 depictions showed on the horizontal axis of the display is on behalf of each characterization interval T/12. So, every depiction has 5 (T/60) sets of records. Users can set the corresponding Cond./Res. measuring range in its set-up menu(see section 7.4). The smaller the range is set, the higher resolution of the display is. The trace mode is shown as below. There are also real-time measurement value, & unit, and temperature value & unit which are displayed in the bottom of the screen.

Attention: When the time interval has been reset, the trend in the data will not be retained, it will start a new trace record.

Note: The time display format (XX: XX) (hr: min), for example, appear as four weeks (672:00).

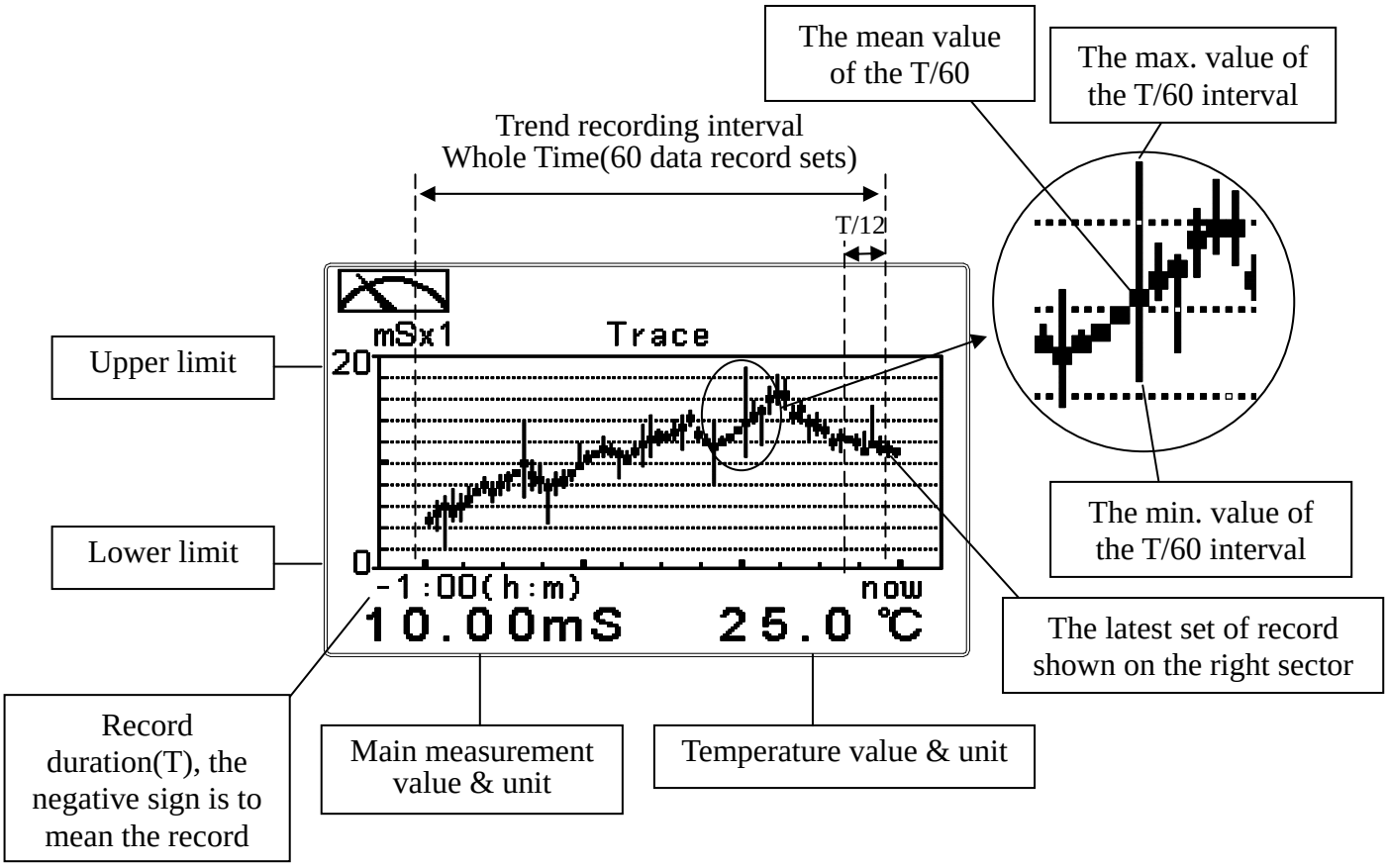

6.4 Warning symbols and text

1. When the wash device is turned on, the display shows and twinkles the description, “Clean Running”. At the same time, the ACT indicator LED lights up, and the transmitter automatically turns off Relay 1 and Relay 2 function. After finishing cleaning, the Relay 1 and Relay 2 will automatically back to normal status.
2. When Relay 1 which is set in high setting point is in action, the display shows and twinkles the description, “REL 1_Hi”, and ACT indicator LED lights up. When Relay 1 which is set in low setting point is in action, the display shows and twinkles the description, “REL 1_Lo”, and ACT indicator LED lights up.
3. When Relay 2 which is set in high setting point is in action, the display shows and twinkles the description, “REL 2_Hi”, and ACT indicator LED lights up. When Relay 2 which is set in low setting point is in action, the display shows and twinkles the description, “REL 2_Lo”, and ACT indicator LED lights up.

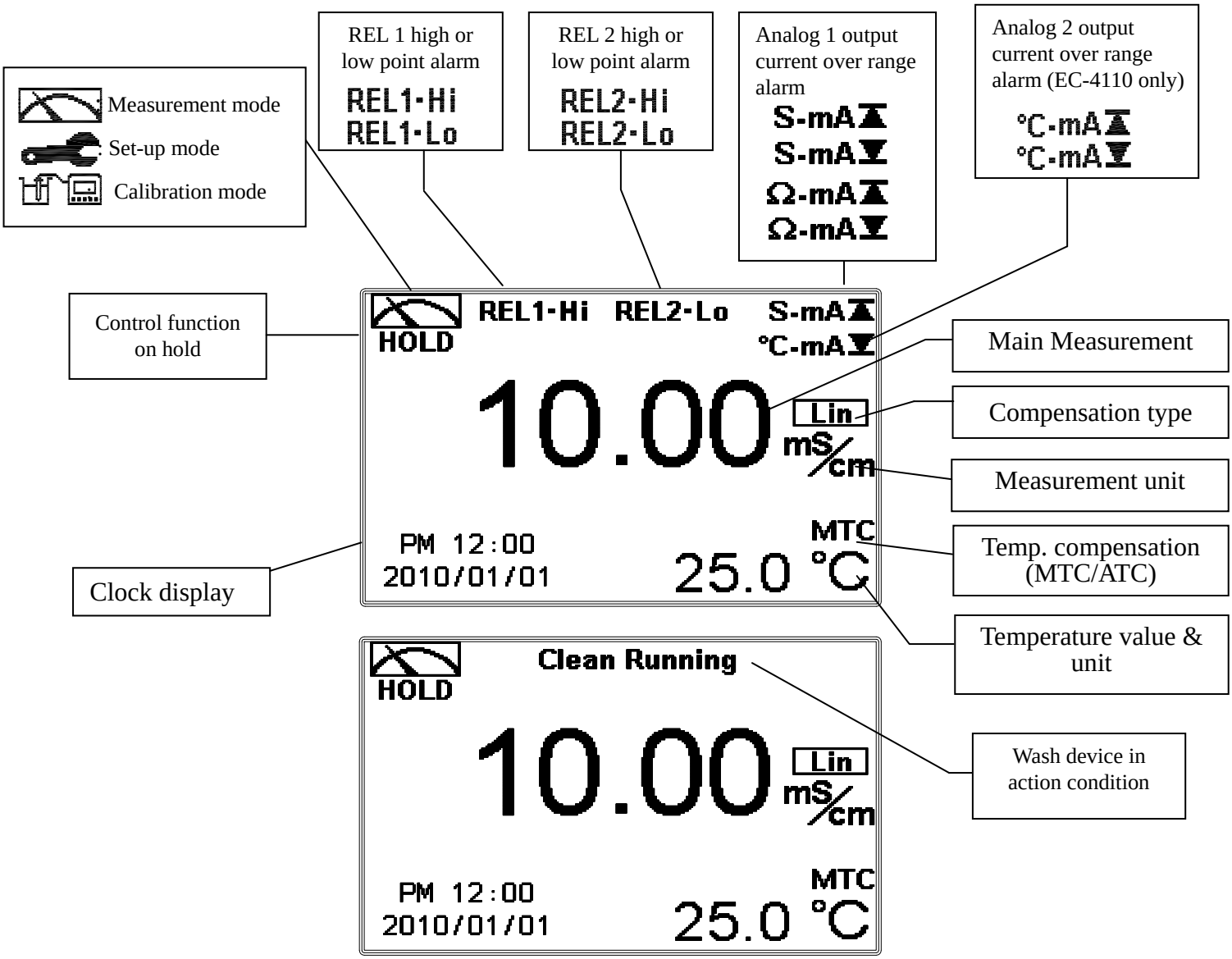

Note: HOLD warning symbol appears in the cleaning status, set-up mode, and calibration mode. Under hold status, the relative display and output are as follows:

1. Relay 1, 2 will cease from action. When it is form hold status of cleaning to enter into the set-up menu or calibration menu, the transmitter will cease the cleaning function.
2. The last signal output value of analog current output is kept in the reading before HOLD status.
3. The last signal output value of RS-485 interface is kept in the reading before HOLD status.

7. Settings

Block diagram of settings 1:

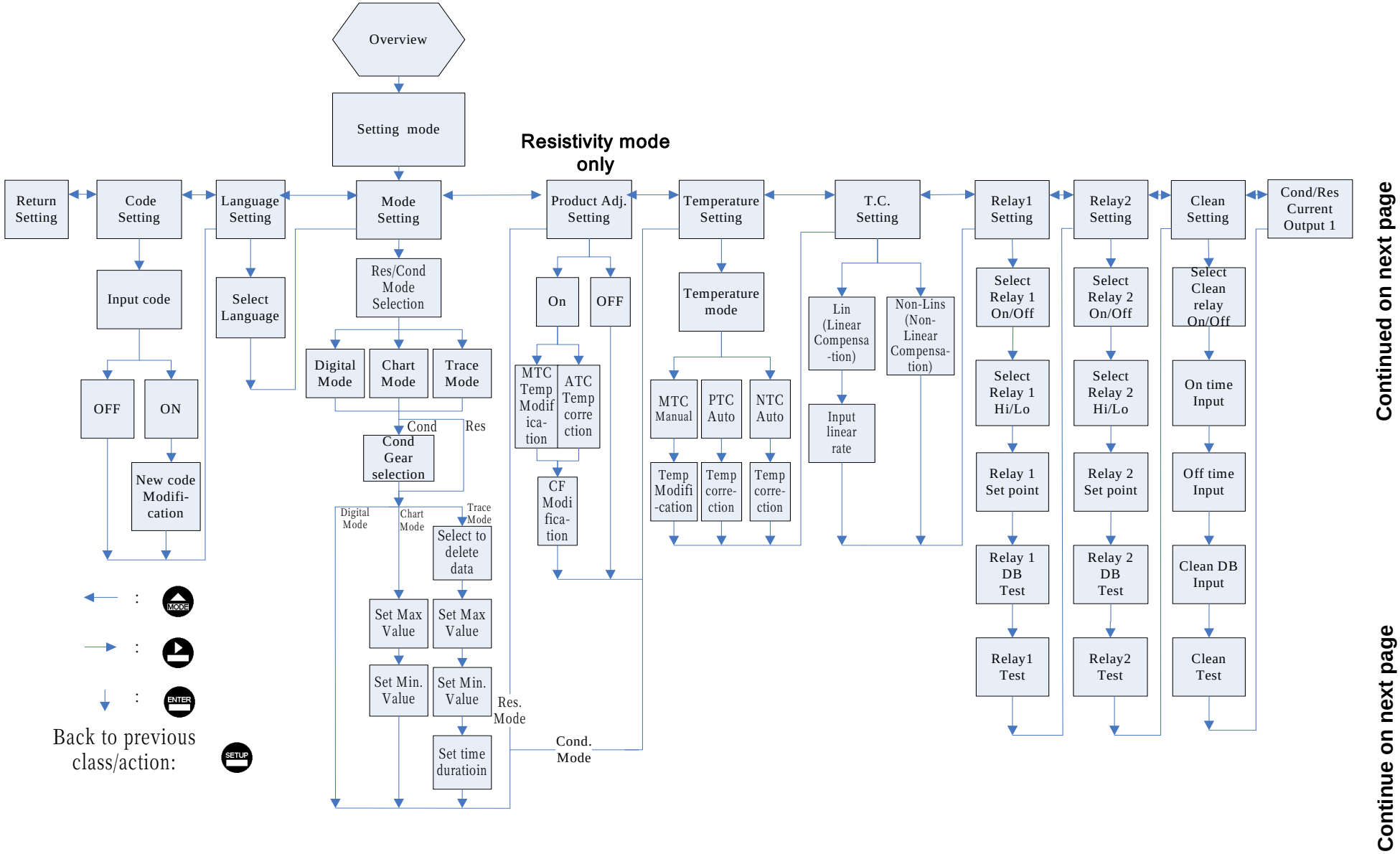

Block diagram of settings 2:

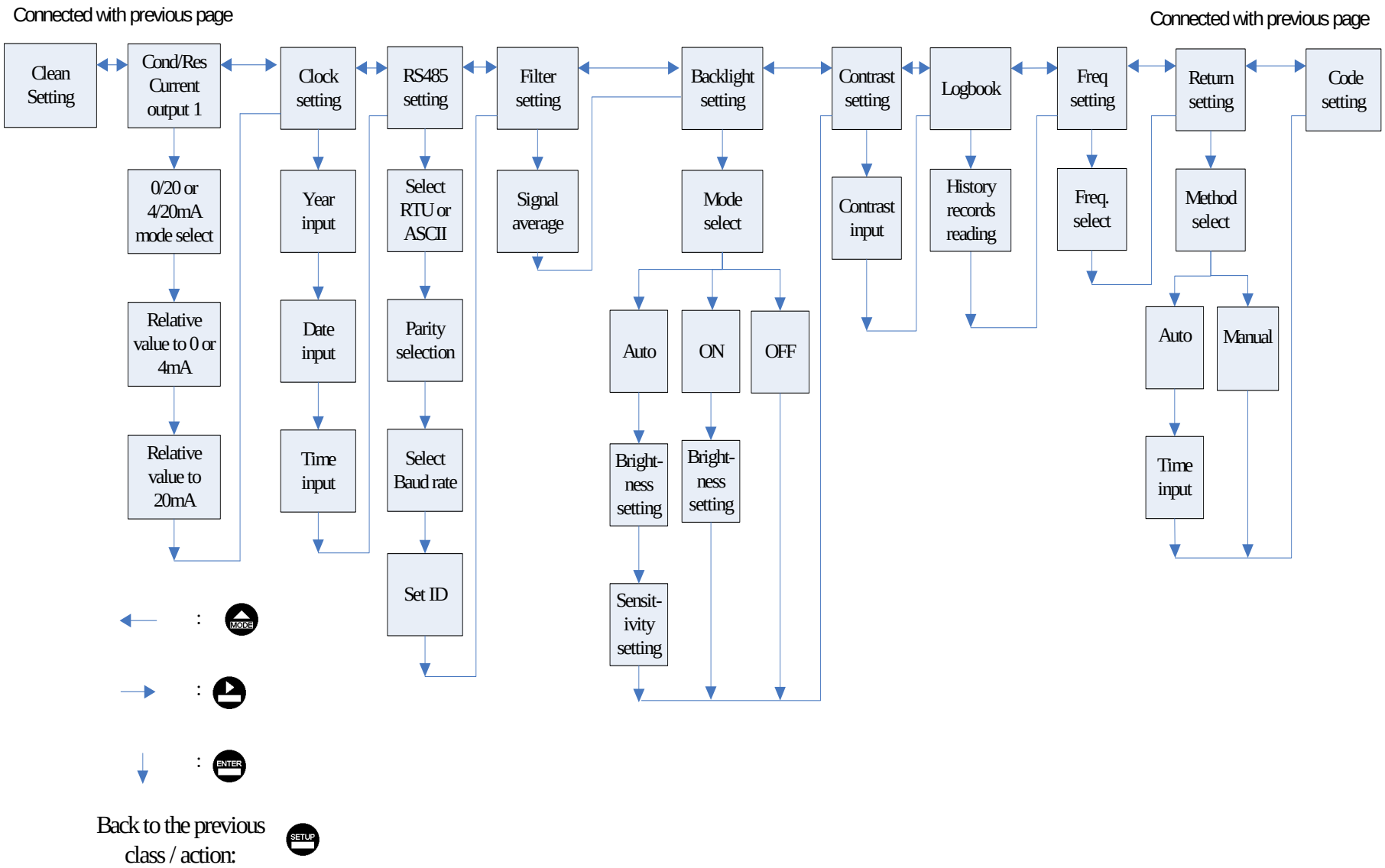

7.1 Entry of set-up menu

In the measurement mode, pressing the two keys SETUP and MODE simultaneously allows you enter the overview of current setting, and press ENTER to enter the set-up mode to modify the setting if necessary.

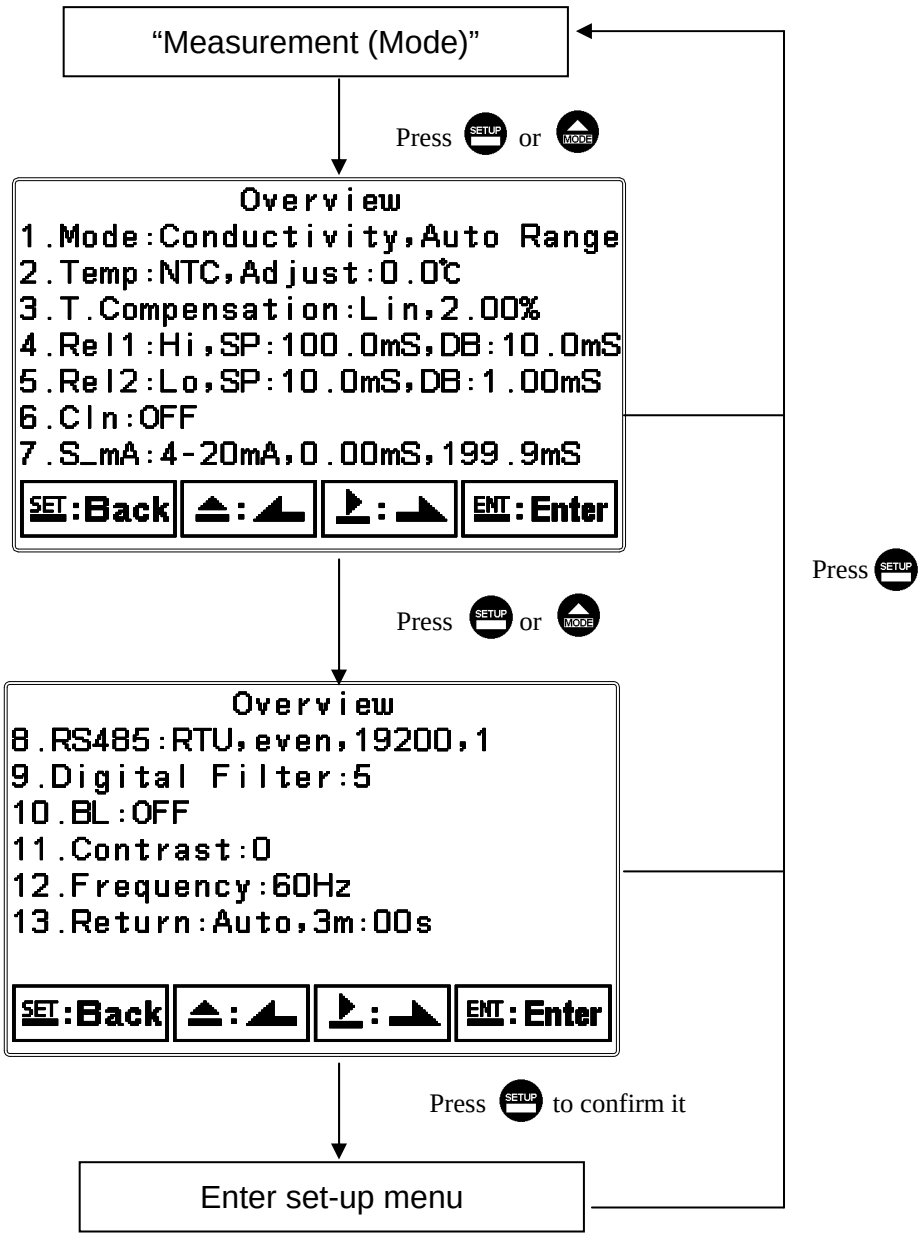

7.2 Security code of settings:

After entering set-up mode, select “code” item, press ENTER to enter into code procedure. **The code pre-setting is 1111.**

Note: The code of setting mode is prior to the code for calibration. That means that the code of setting mode can be used for the code of calibration mode.

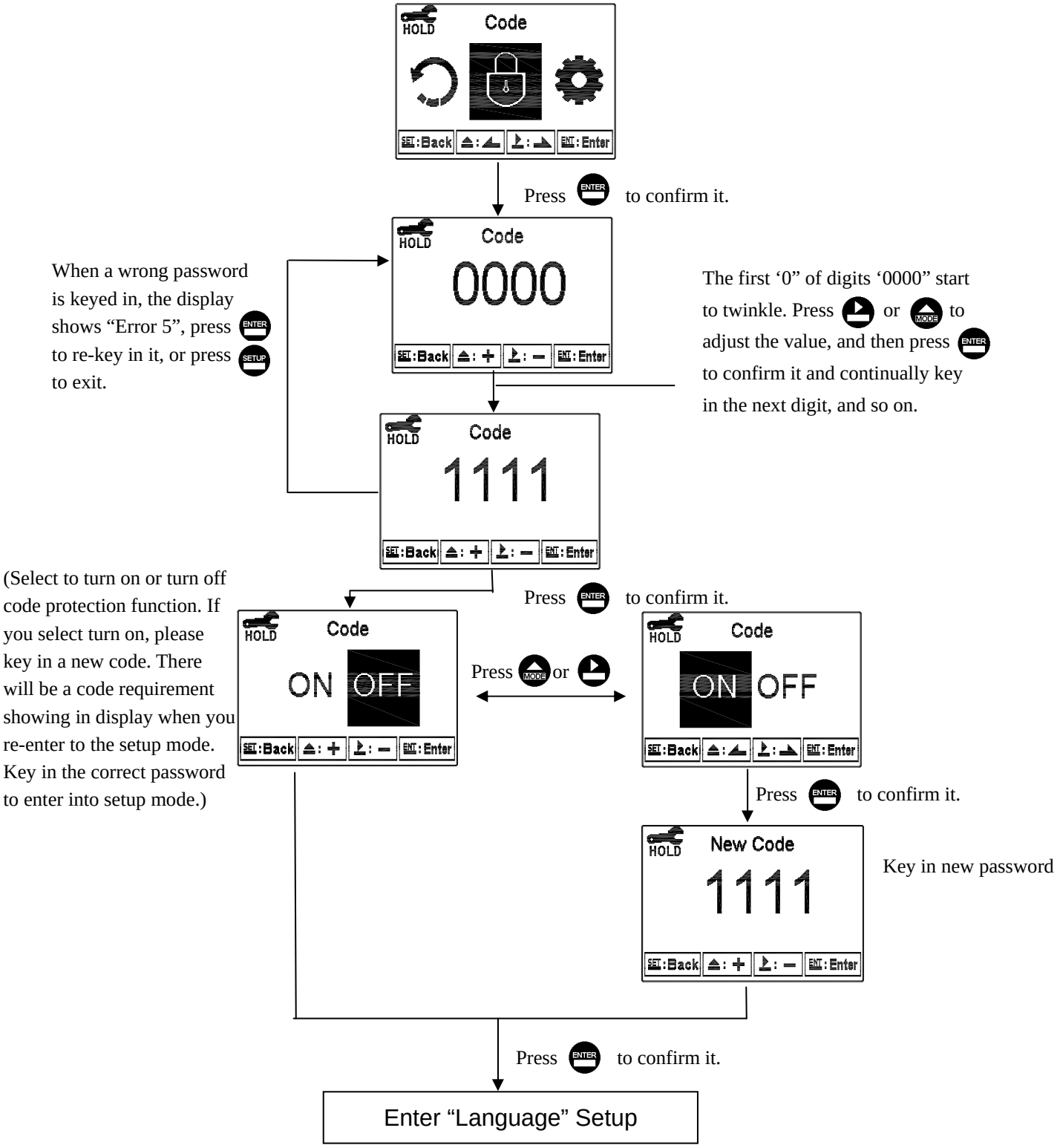

7.3 Language

After entering set-up mode, select “Language” item, press ENTER to enter into language setup. There are English, Traditional Chinese, and Simplified Chinese for selection.

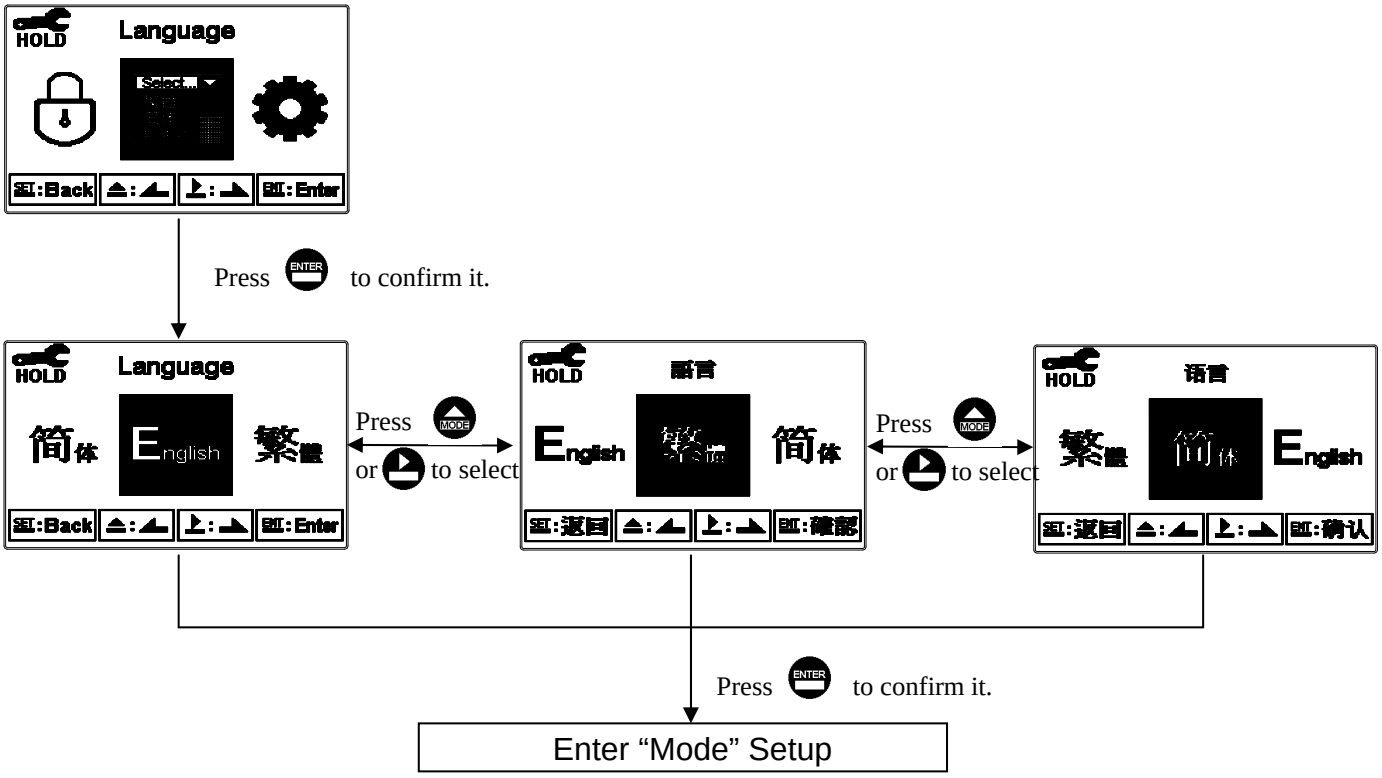

7.4 Mode

7.4.1 Enter setup of Mode, select Conductivty(Cond.) measurement mode and select the display mode. Select measurement gear from AUTO, 20.00µS, 200.0µS, 2000µS, 20.00mS, 200.0mS.

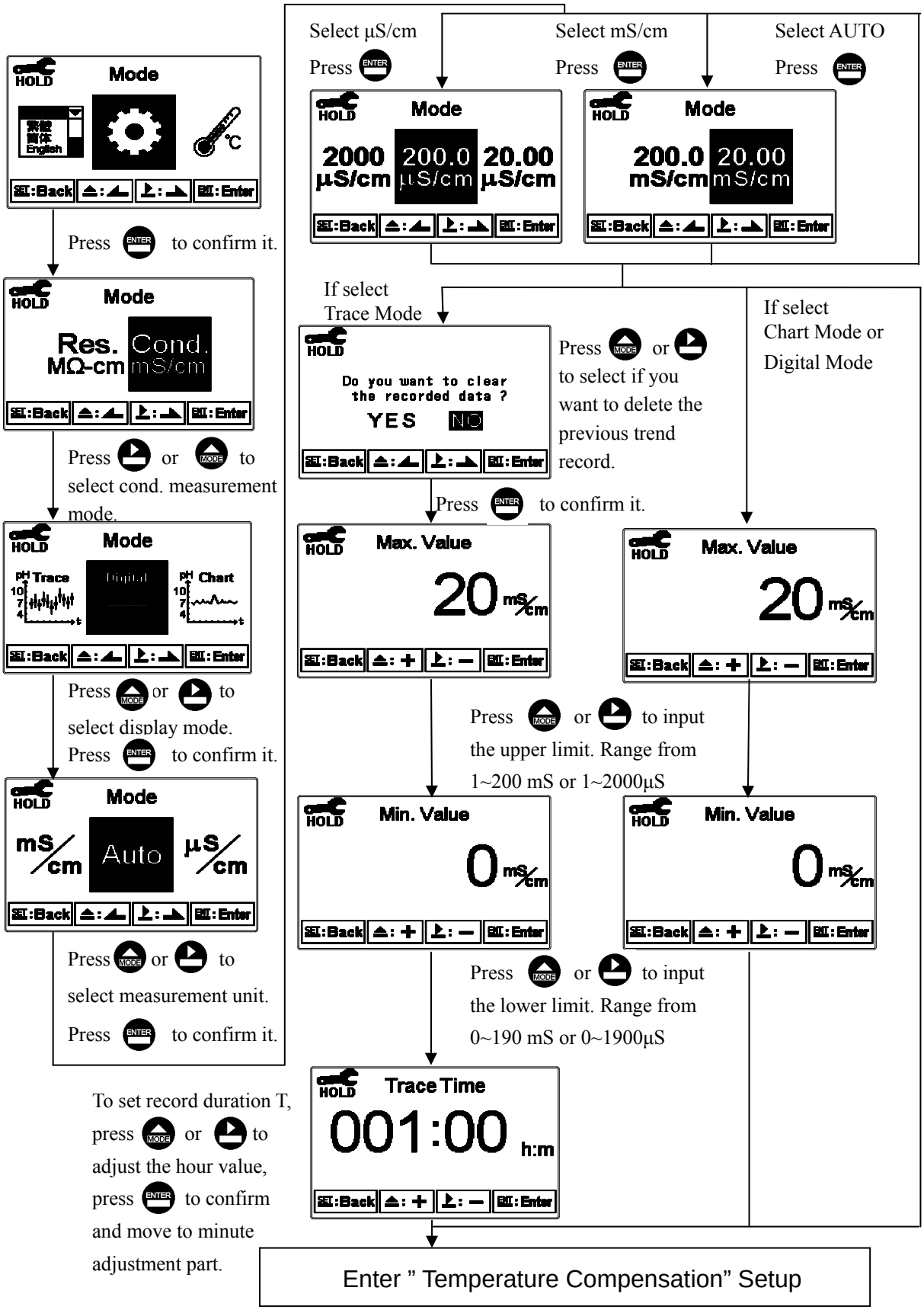

7.4.2 Enter setup of Mode, select Resistivity(Res) measurement mode and select the display mode.

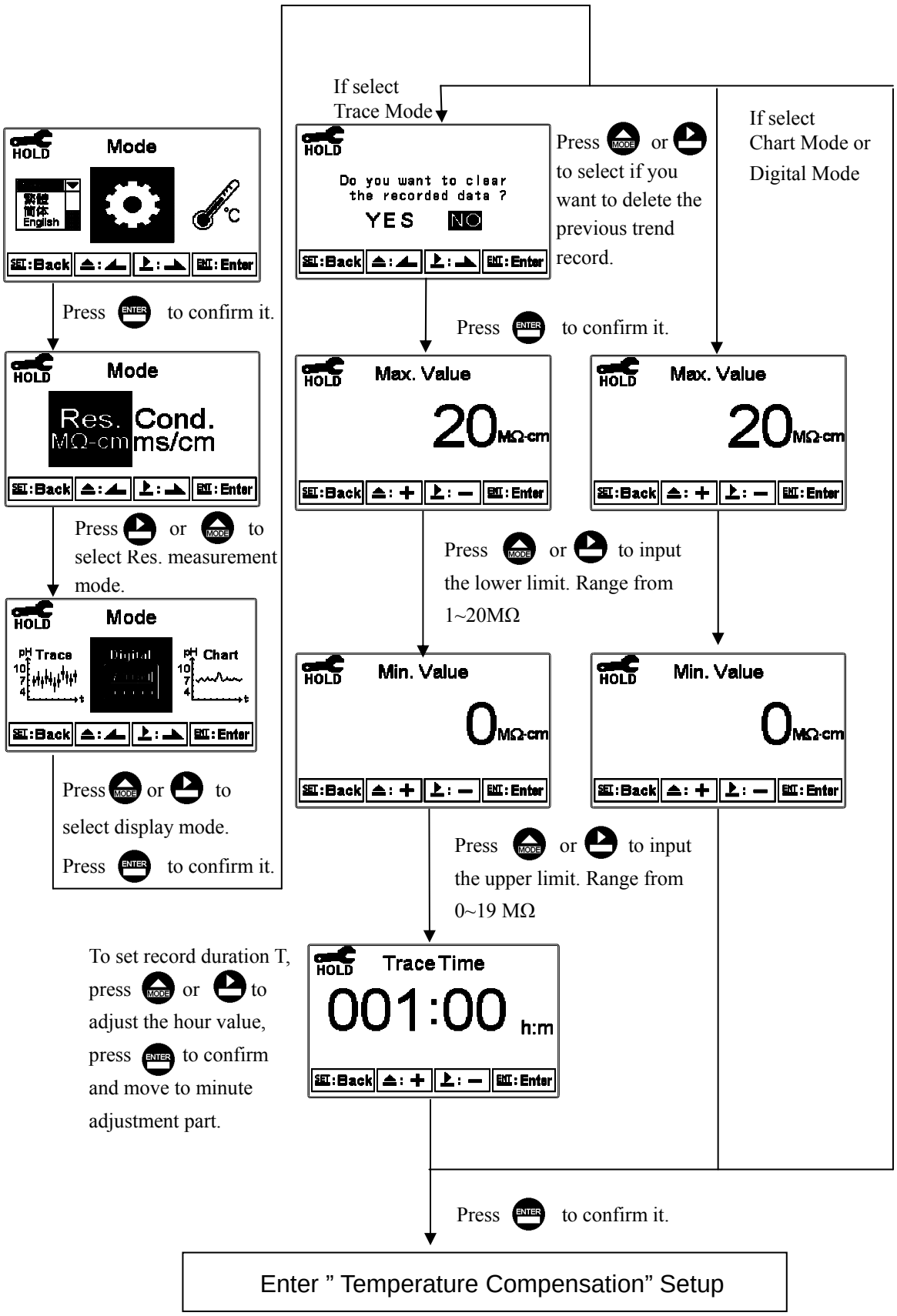

7.5 Product Adjustment (Resistivity mode only)

Enter setup of product Adjustment to make the fine adjustment of the measurement reading. For ultra-pure water application, the function can increase the resolution of cell constant, and it makes users to adjust the cell constant through a Cell Factor (CF adjustable range: 0.7000~1.3000). It also allows two decimal of the temperature display which increases the sensitivity of cell constant and temperature change and achieves the fine adjustment of reading up to 0.01Meg ohm. It helps the users to see the small change of reading or trend in ultra-pure water application.

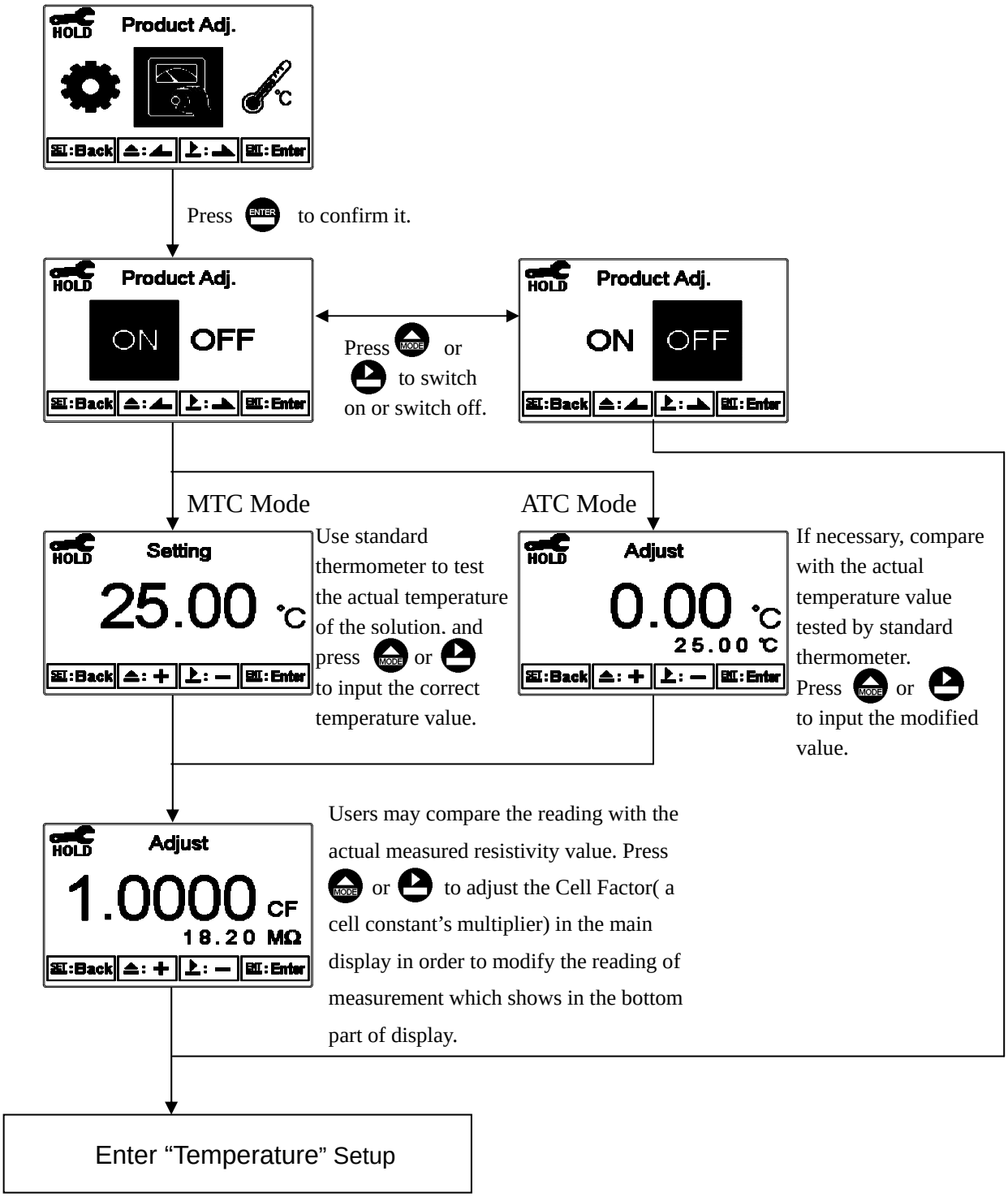

7.6 Temperature

Enter setup of “Temperature” to select temperature compensation mode. Select from NTC(NTC 30K), PTC(PT 1K) or MTC(Manual adjustment), or you may press MODE & ▶ simultaneously to back to default setting. In the measurement mode, if selecting MTC for temperature compensation mode, you may press MODE or ▶ to adjust MTC temperature value.

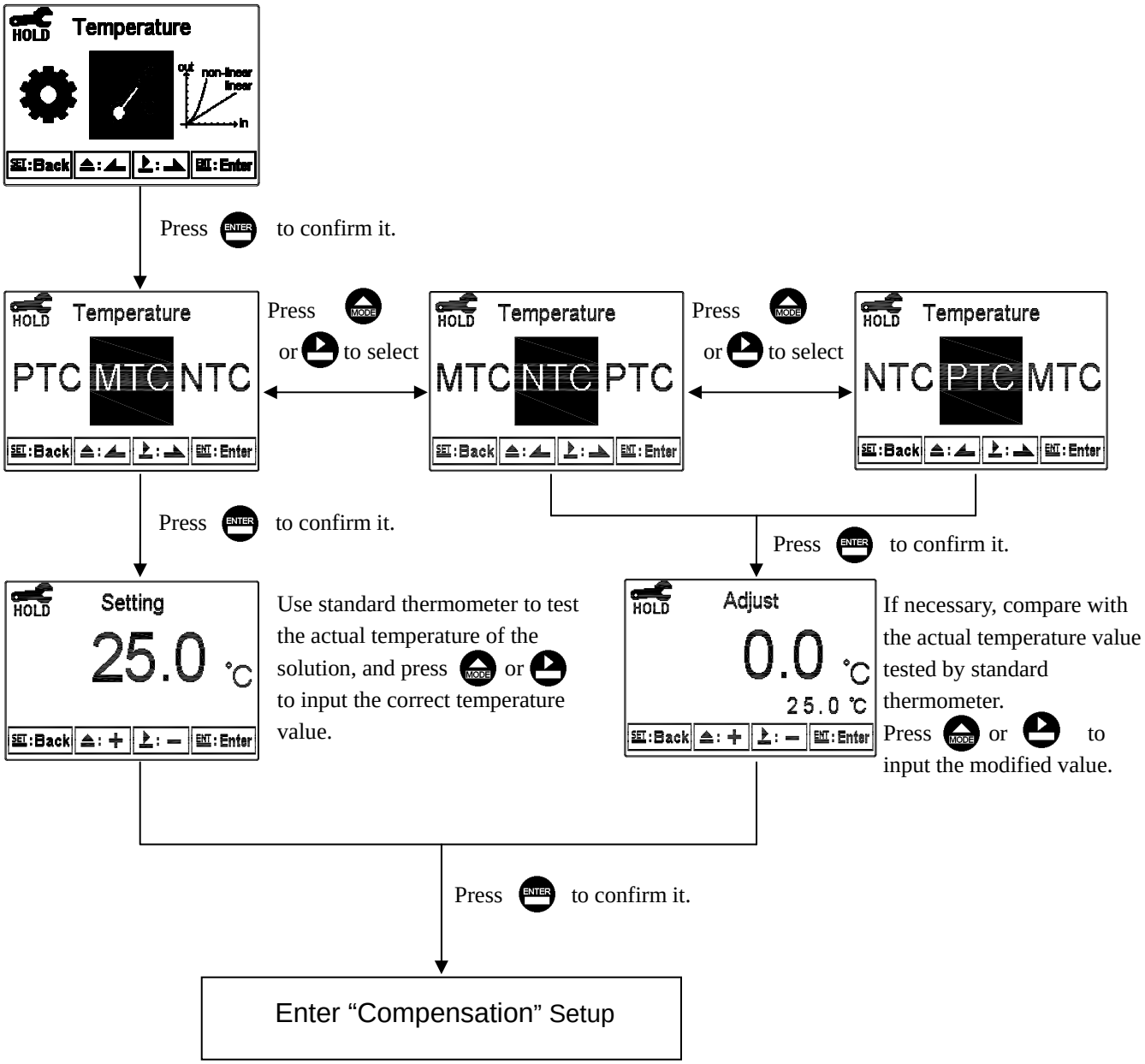

7.7 Compensation

Enter setup of compensation mode, and select Linear Compensation or Non-linear compensation mode. According your measurement need for temperature coefficient, you may select linear (Lin), non-linear (nLin), or non-compensated (Lin 0.00%). Normally, select linear compensation for conductivity measurement(Cond), and select non-linear compensation for Resistivity measurement.

Temperature coefficient (hereinafter referred to as TC): Conductivity of solution increase with temperature rise. The relationship is as follows:

C_{25}	Conductivity at 25˚C	Formula 1：$Ct = C_{25}\{1+\alpha(T-25)\}$
Ct	Conductivity at T˚C	
T	Measured solution temperature	Formula 2：$\alpha = (Ct - C_{25}) / \{C_{25}(T-25)\}$
α	Temperature compensation	

How to get TC of solution: For obtaining higher accuracy of measurement, you may calculate the TC value according to the formulas above and set an appropriate TC value for the instrument. Take an example for 0.01N KCl. Set the TC of the instrument to non-compensated（Lin, 0.00%）, and control the temperature at 25˚C and at 20˚C. C_{25} means the measurement value at 25˚C(Such as C_{25} = 1413μS). Ct means the measurement value at 20˚C(Such as C_{25} = 1278μS). According to the formulas above, α ＝1.91%. (Linear compensation range: 0.00%~40.00%)

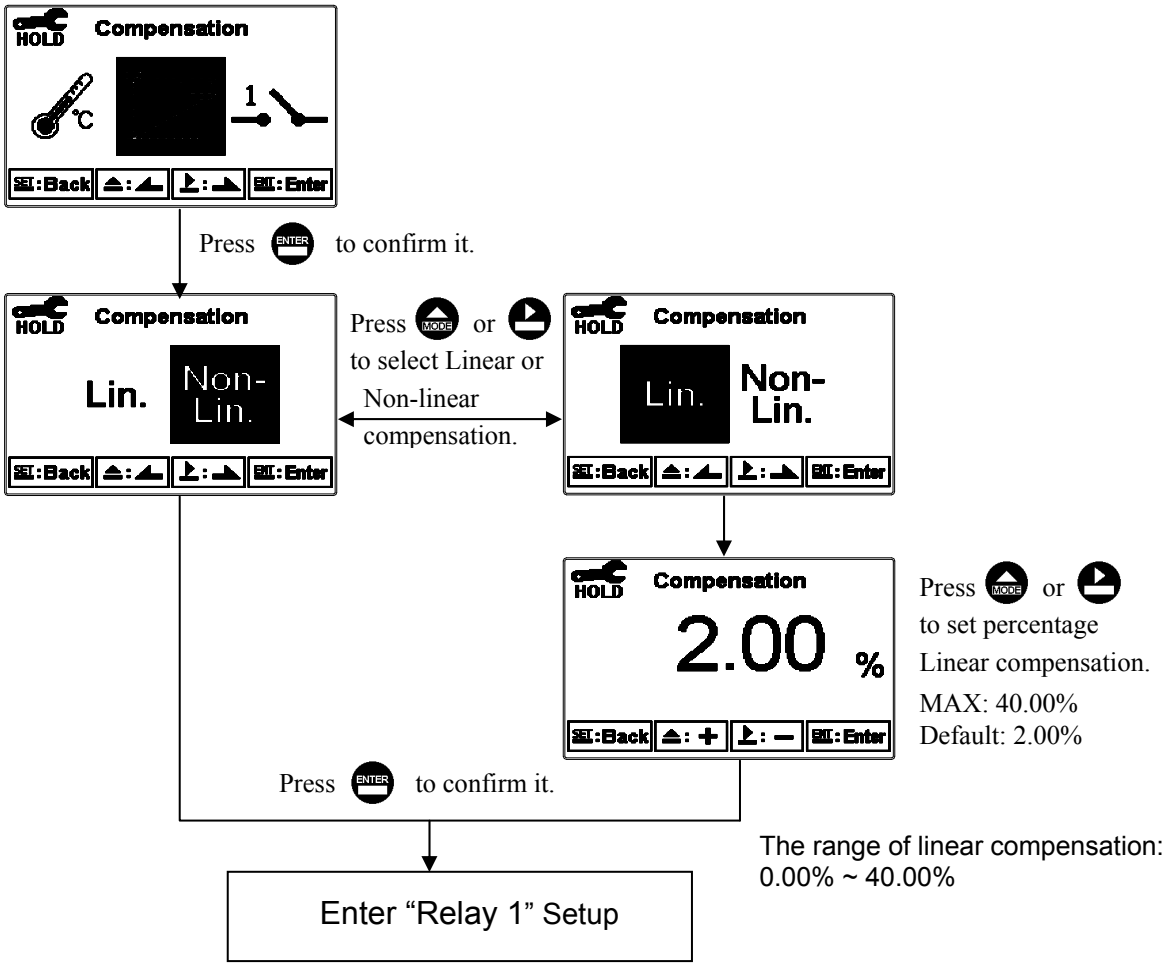

7.8 Relay 1

Enter setup of Relay 1. Select the item to turn on or turn of the relay 1 function. If you select to turn on the relay 1, then select for using relay 1 as “Hi set-point” alarm or “Low set-point” alarm. Set the value of set-point (SP) and dead-band (DB). The range for set-point is 00.00MΩ~19.99 MΩ/00.00μs~1999mS; while the range for DB is 00.00MΩ~2.00 MΩ/00.00μs~19.99mS. (The measurement unit is depending on the use of measuring range)

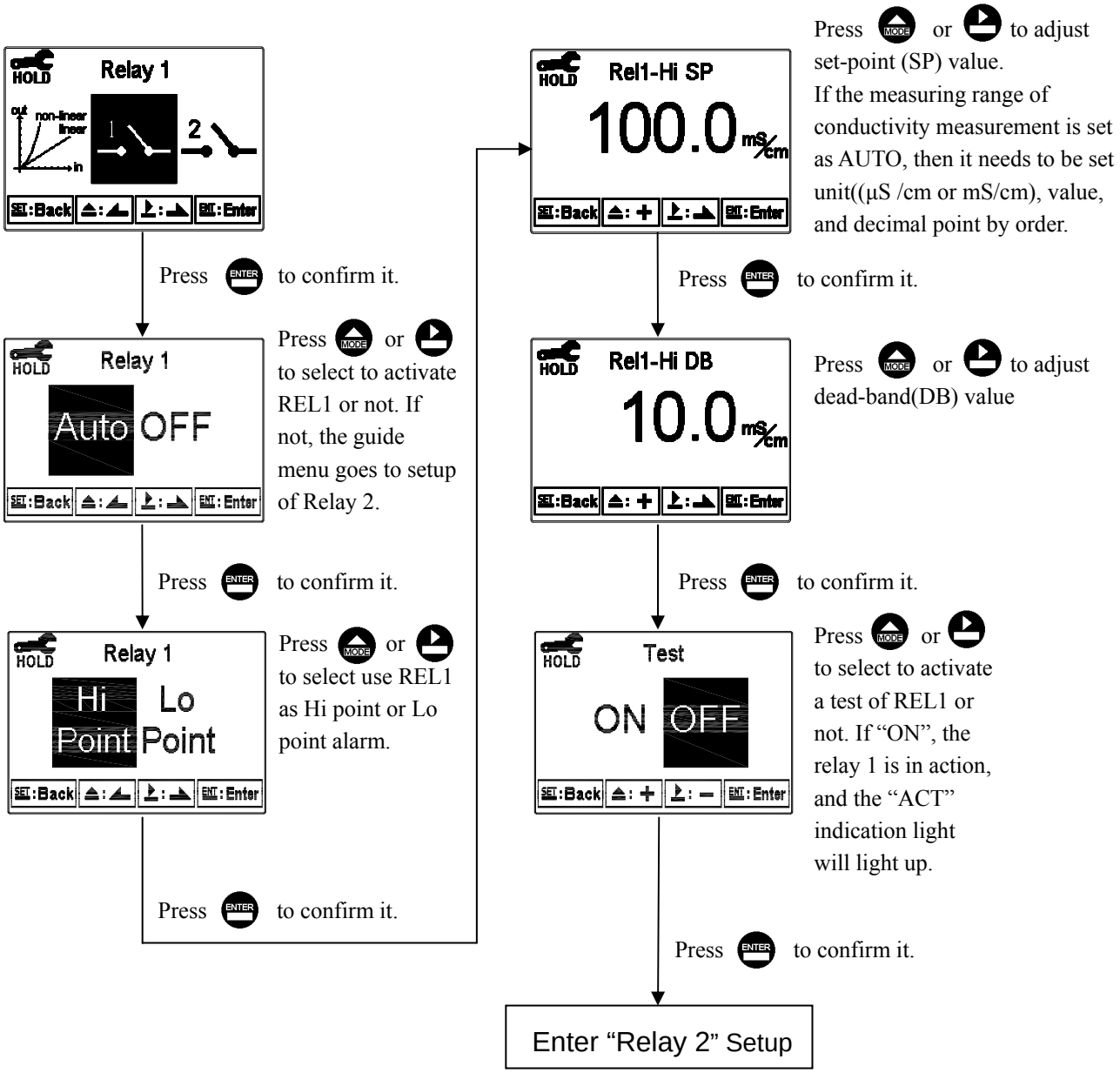

7.9 Relay 2

Enter setup of Relay 2. Select the item to turn on or turn of the relay 2 function. If you select to turn on the relay 2, then select for using relay 2 as “Hi set-point” alarm or “Low set-point” alarm. Set the value of set-point (SP) and dead-band (DB). The range for set-point is 00.00MΩ~19.99 MΩ/00.00μs~1999mS; while the range for DB is 00.00MΩ~2.00 MΩ/00.00μs~19.99mS. (The measurement unit is depending on the use of measuring range)

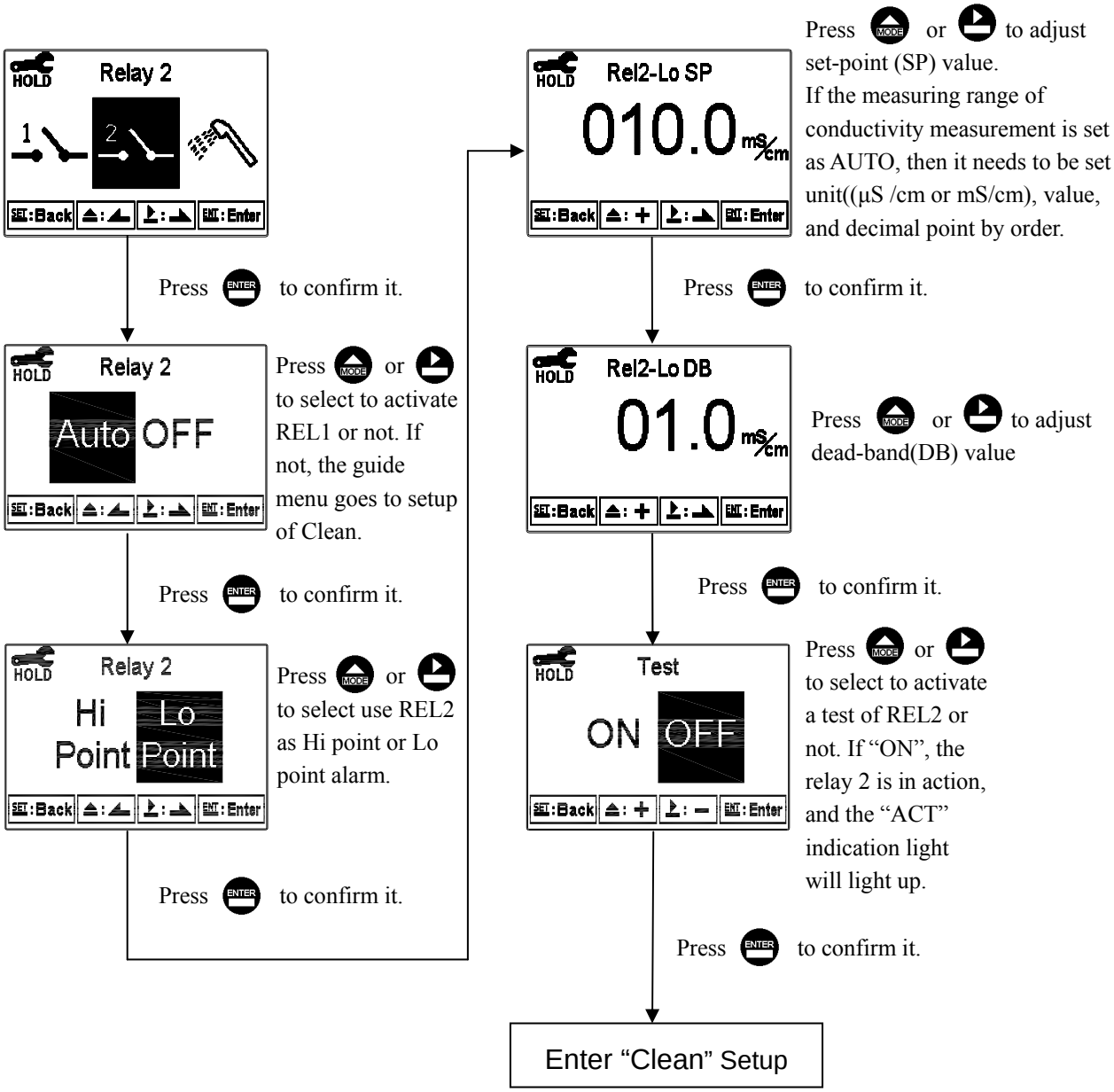

7.10 Clean

Enter setup of “Clean” function. Select the icon to turn on or turn off the clean function. If you select “Auto” turning on, and set the timer of the clean function including automatically turning on time and turning off time, and set the bead-band value(DB).

Note: When the clean function is turned on, if any value is set to be 0, the instrument will automatically turn off this function.

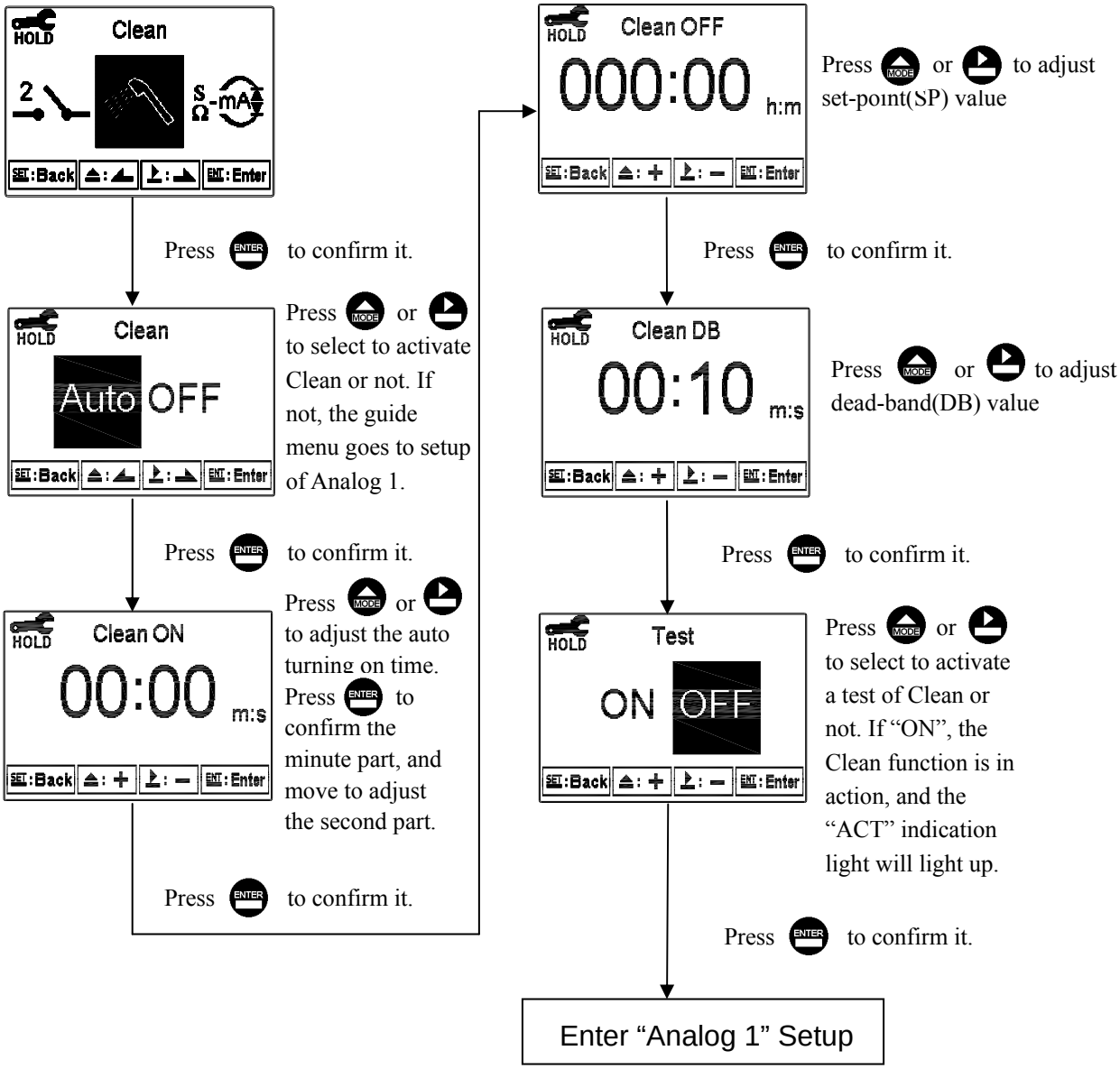

7.11 Analog output 1 (Cond/Res):

Enter setup of Analog 1. Select 0~20mA or 4~20mA current output. Set the related value to the range of Cond./Res. measurement. If the range of the Cond./Res. measurement is set smaller, the resolution of current output is higher. When the measurement value exceeds the upper limit of setting range, the current output remains at around 22mA. When the measurement value exceeds the lower limit of setting range, the current output remains at 0mA under 0~20mA mode, or the current output remains at around 2mA under 4~20mA mode. The phenomenon can be used as a judgment reference of abnormality. If under HOLD status, the current output will remain at last current output value before the HOLD status is activated. For the convenience of connecting external recorder or PLC controller, the current output will remain 0/4mA or 20mA while setting its relative measurement value.

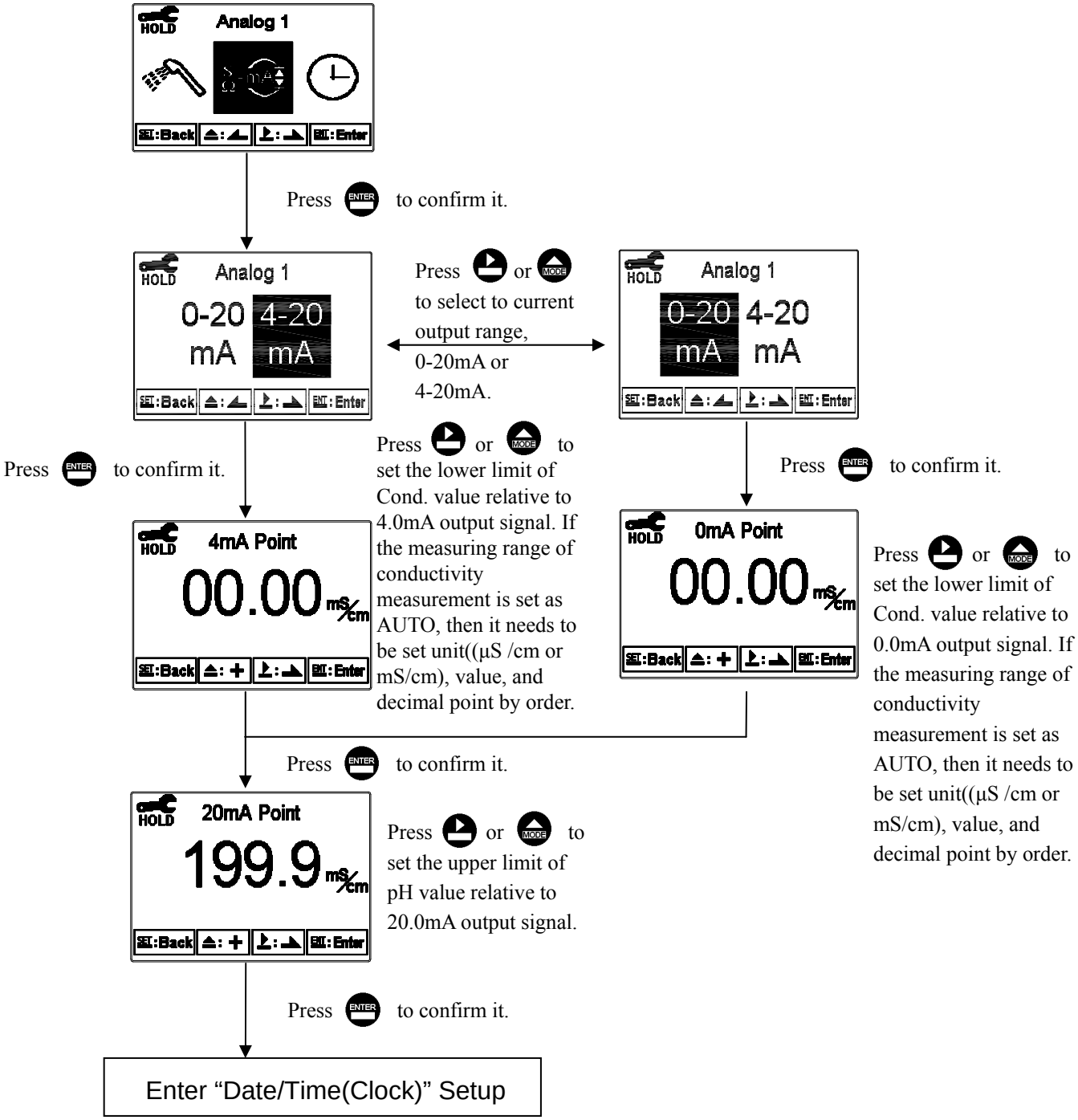

7.12 Date/Time(Clock)

Enter setup of Date/Time(Clock). Set the “Year”, “Month”, “Date”, “Hour”, and “Minute” time. Note: The clock needs to be reset once encounters power failure with the EC-4110 model. With the EC-4110RS model, the transmitter may keep the clock in operation even when encountering power failure. Only when the inner battery is out of power, the clock may stop operation. Then, please replace the 3V CR2025 Li batter inside the transmitter.

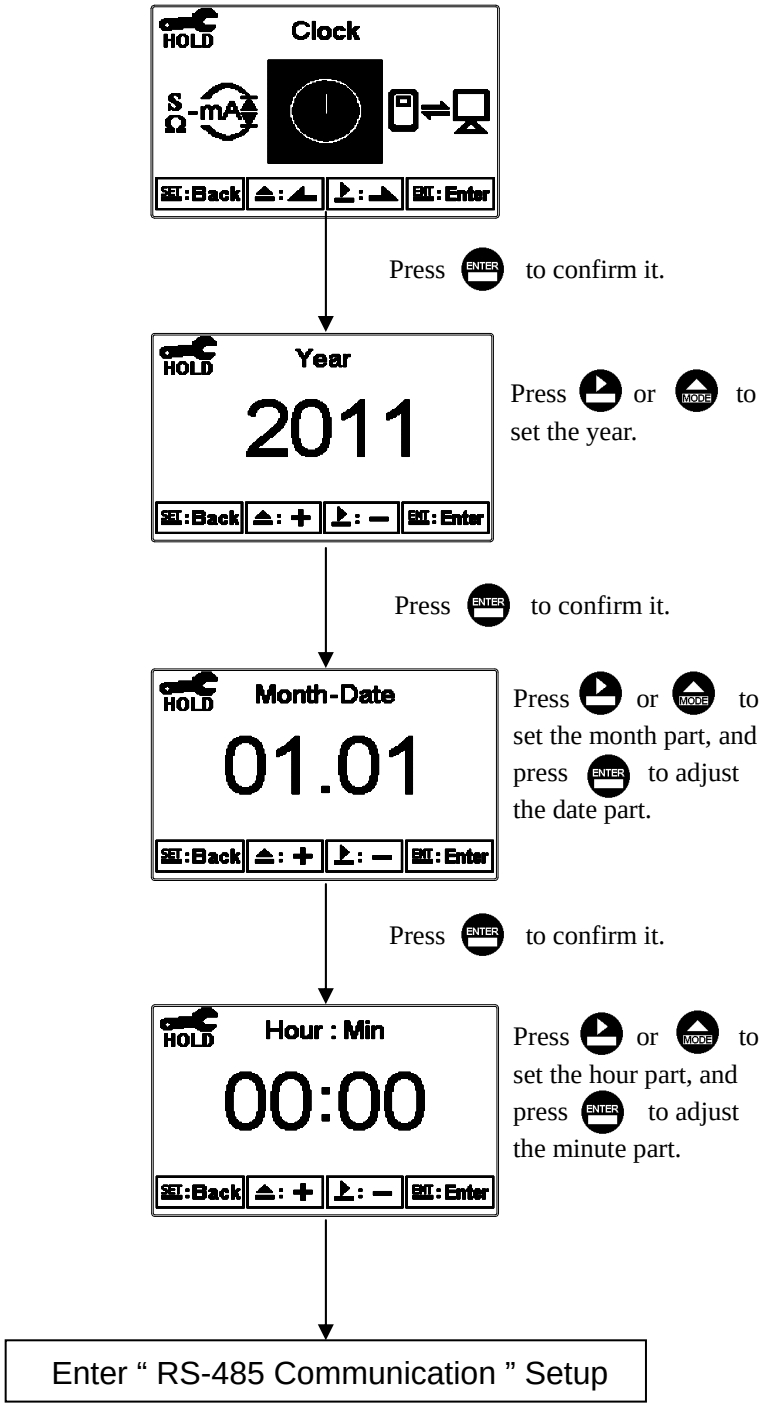

7.13 RS485 communication

Enter setup of RS485 communications. According to the Modbus protocol, set the transmitting mode, parity, baud rate, and ID number. About the detail of Modbus protocol, please refer to Ch9. If under hold status, the measurement signal output maintains the last output value before hold status.

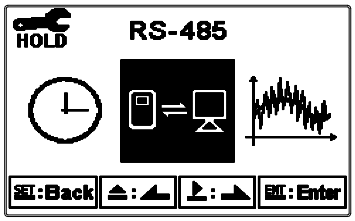

Press ENTER to confirm it.

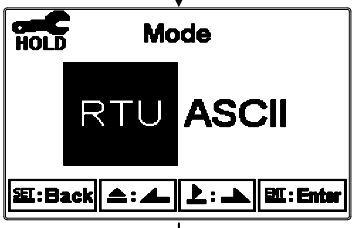

Press ▶ or MODE to select RTU or ASCII mode.

Press ENTER to confirm it.

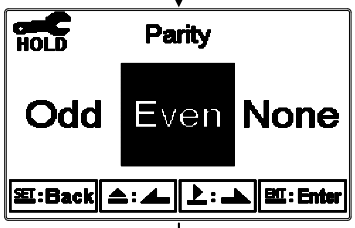

Press ▶ or MODE to select Even, or Odd, or None for parity check.

Press ENTER to confirm it.

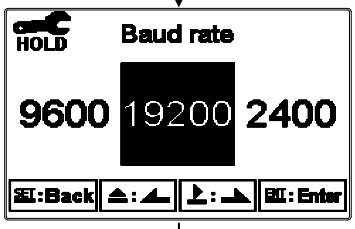

Press ▶ or MODE to select 2400, or 4800, or 9600 for baud rate.

Press ENTER to confirm it.

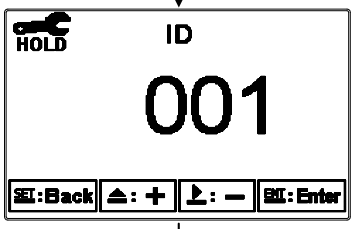

Press ▶ or MODE to set the ID number of the transmitter. The valid value is from 1 to 247.

Press ENTER to confirm it.

Enter " Sample average of measurements (Digital Filter) " Setup

7.14 Sample average of measurements (Digital Filter)

Enter the setup of Digital filter. You may select the number of sample to be averaged each time to become a reading which is gradually counted in order to increase the stability of measurement.

Note: There is a “0” special setting to represent automatic select number of sample average by transmitter.

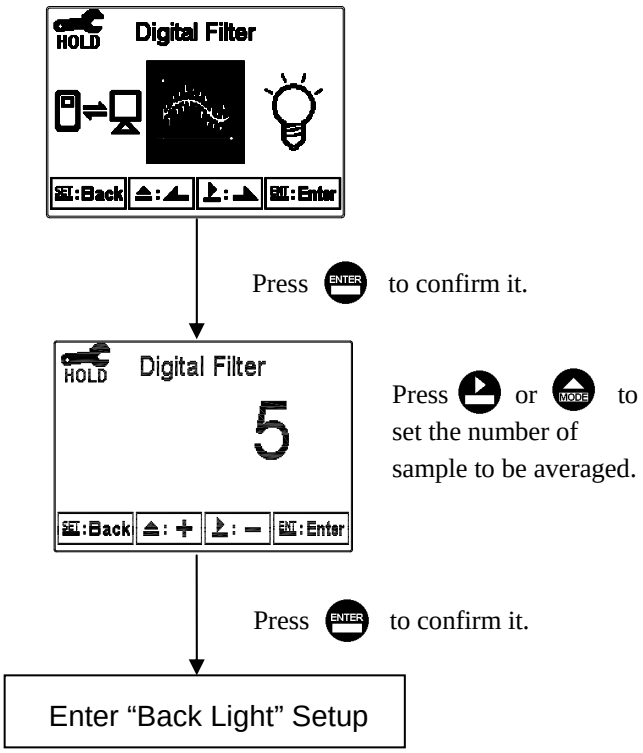

7.15 Backlight settings

Enter setup of backlight display. According to your need, you can set the brightness of display(-2~2, dark~ bright) and sensitivity of the sensitization sensor(-2~2, insensitive~ sensitive). Under AUTO or OFF mode, there is a touch-on function which means if press any key the display backlight function acts, and then if there is no-pressing during 5 seconds it goes back to original setting status.

ON: Backlight light up **OFF: Backlight turns off & Touch-on mode**

AUTO: According to ambient condition turn on & off automatically & Touch-on mode

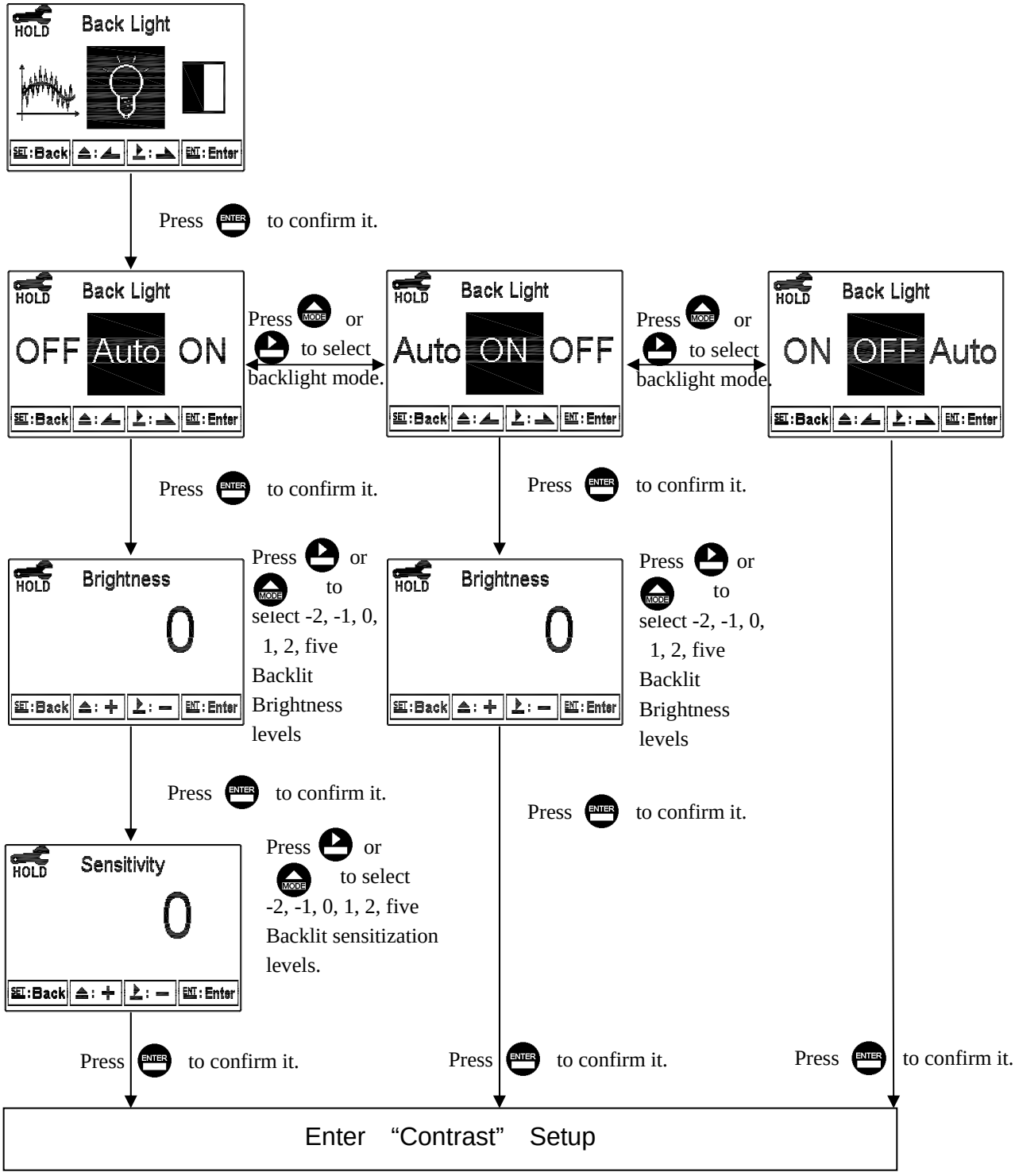

7.16 Contrast settings

Enter setup of display contrast. You can set the contrast of display according to your need.

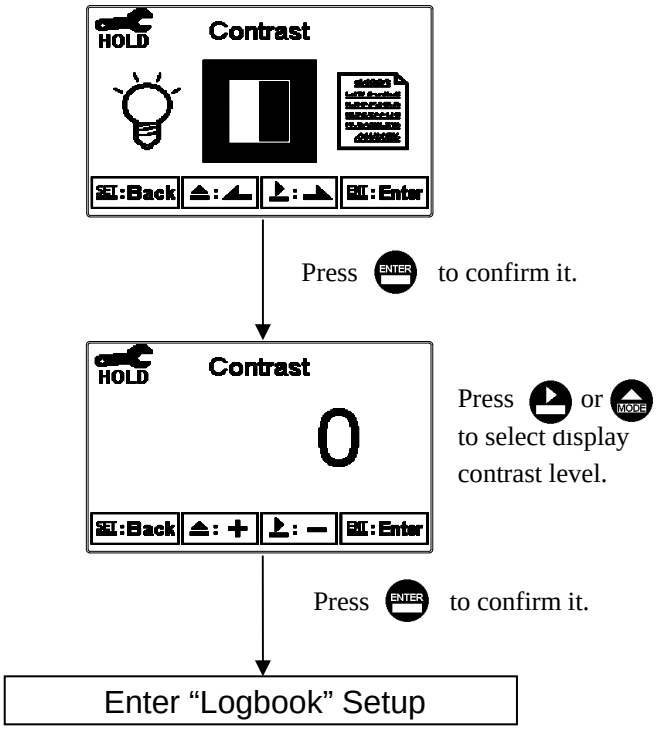

7.17 Logbook

Enter setup of Logbook. Users may look up the relative records of the transmitter. For example, Measurement, Setting, Calibration mode(Mea, Set, Cal mode), current output over setting range(Cond_mA Over), power failure(Power On, Power Off), and other error message records (Error1, Error2…etc. The definition of error messages please refer to Ch10.)

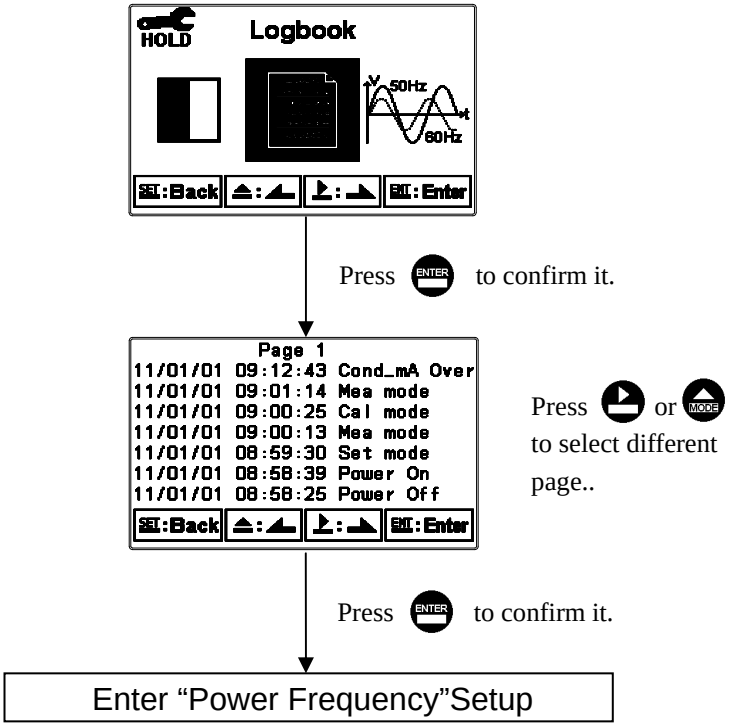

7.18 Power frequency (Freq.)

Enter setup of power frequency. You may select power frequency setting of the instrument 50Hz or 60Hz according to the local power frequency.

Note: This setting significantly affects the normal measurement of instrument, thus, be sure to make the setting correctly.

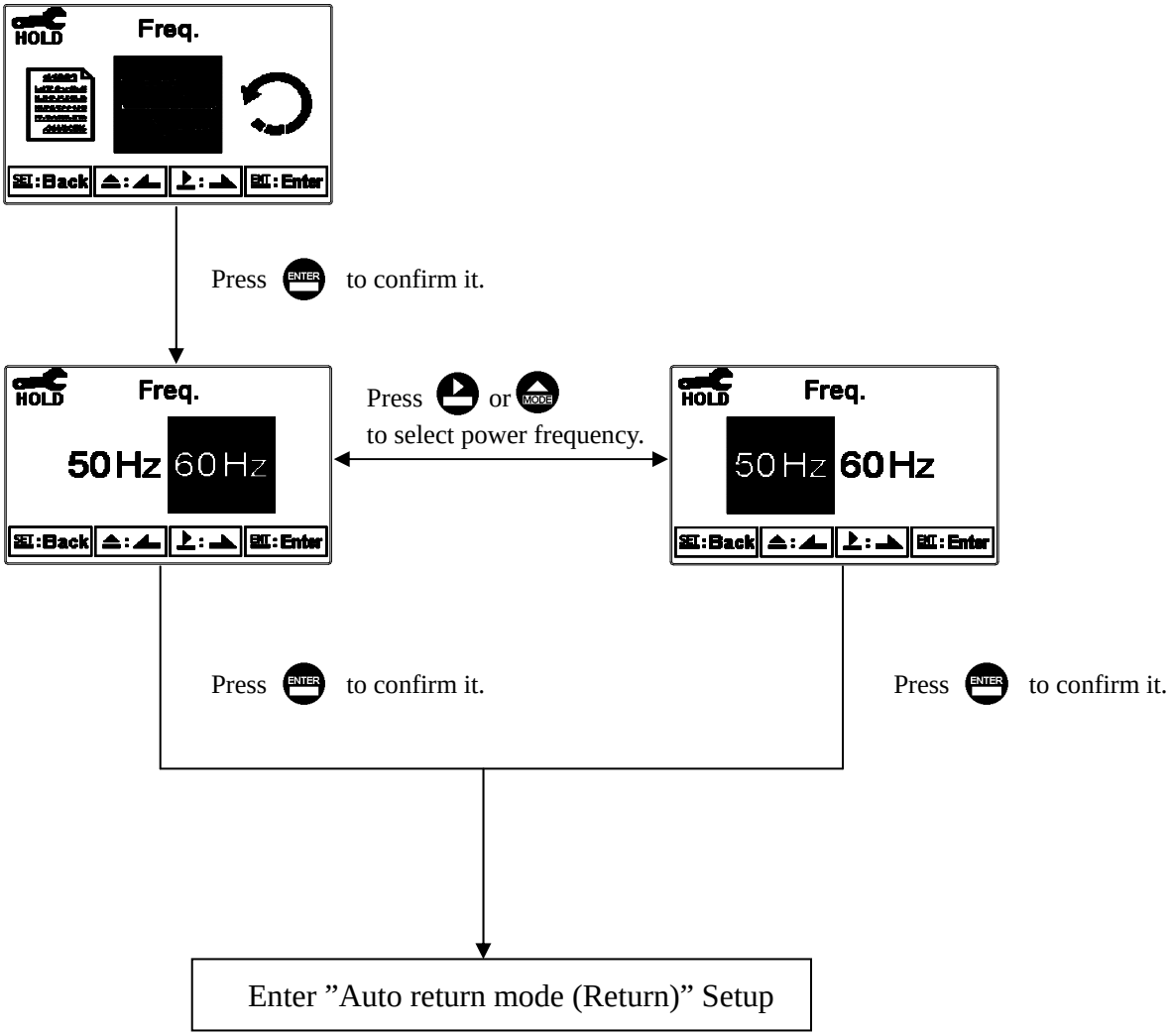

7.19 Return

Enter setup of auto return mode (Return) to set the function that the instrument automatically exit the setup menu after a period of time without pressing any key. The “Manual Exit” means that it needs to exit setup menu manually, while “Auto” means that the display automatically exit the setup menu and back to measurement mode after a period of time without pressing any key.

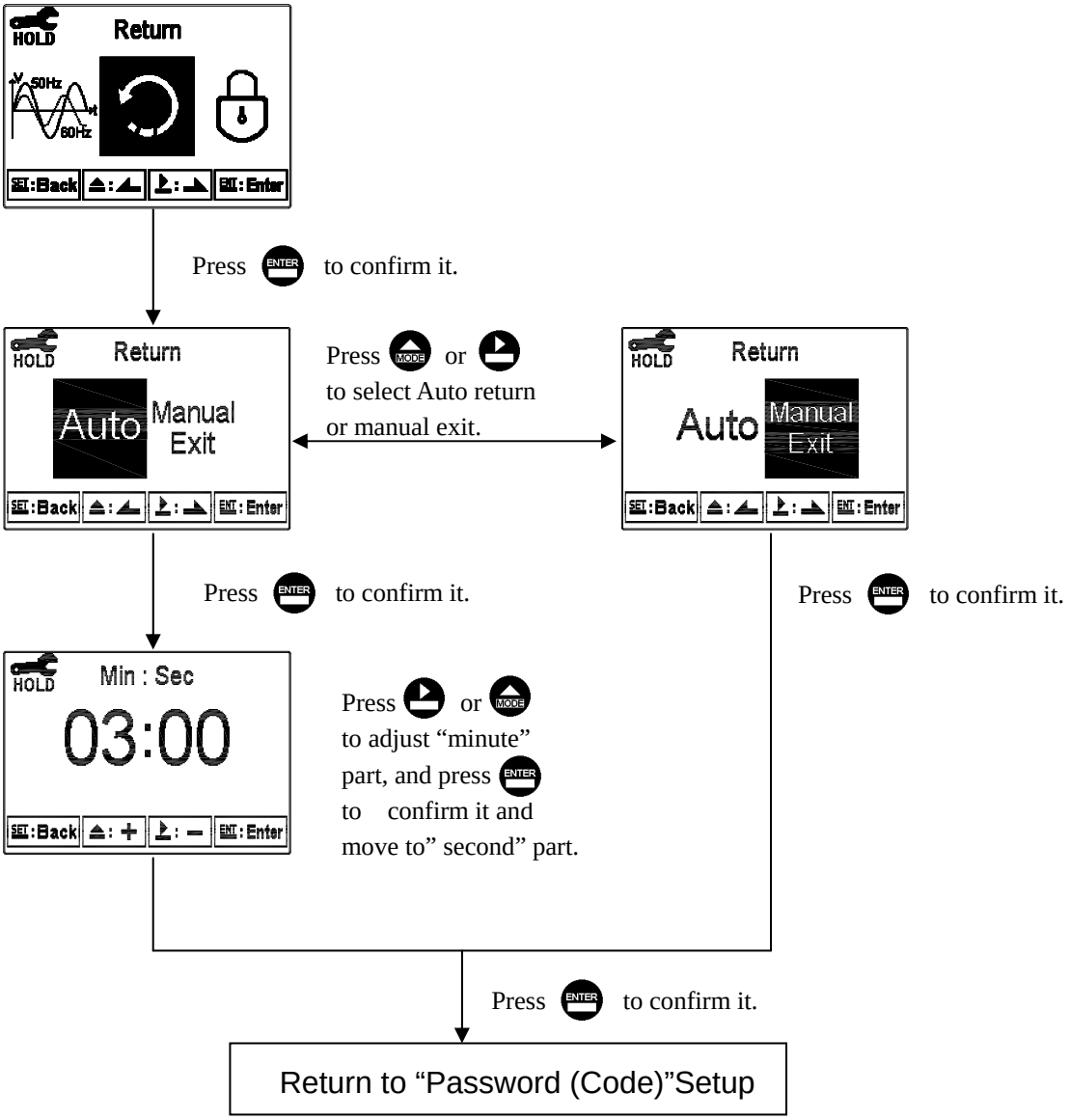

8. Calibration

Block diagram of Calibration

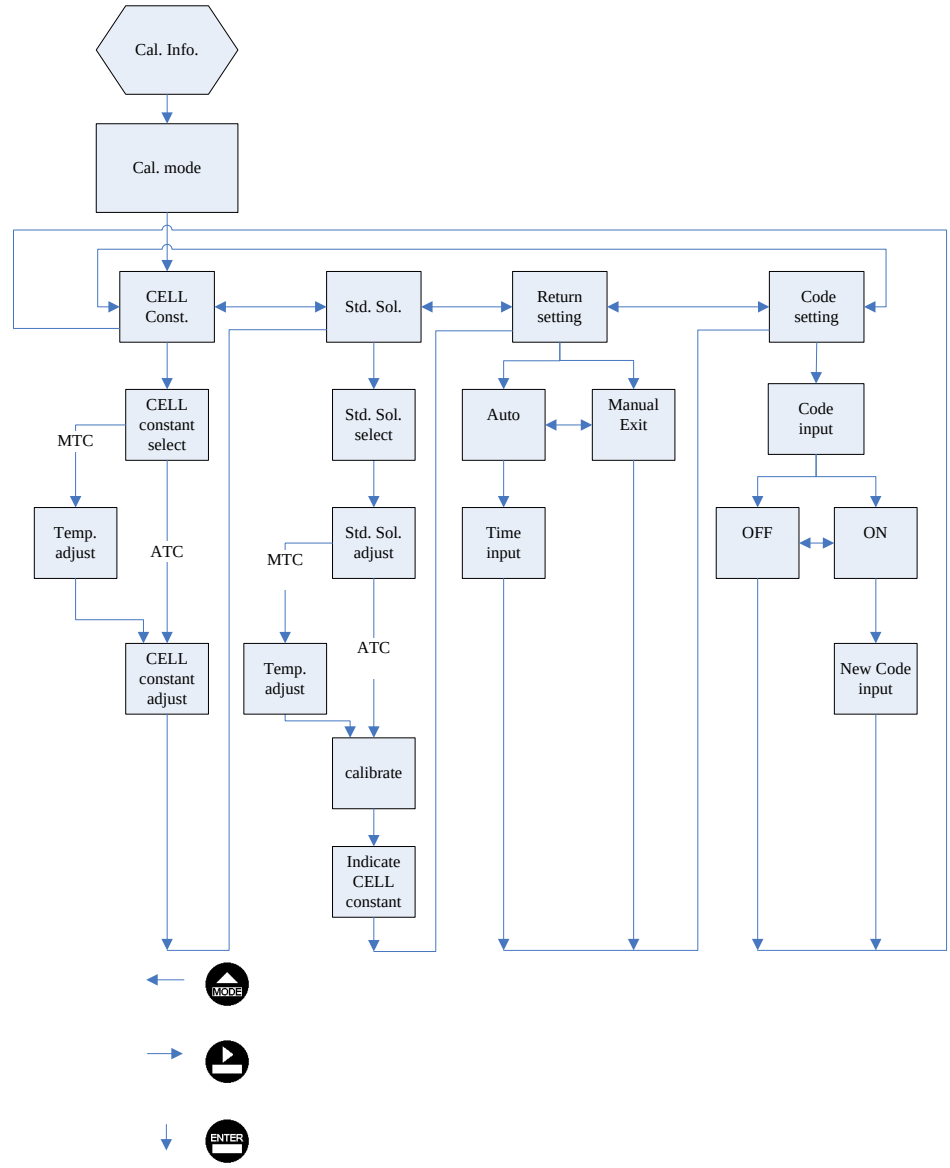

Back to the previous class / action
or the end of the procedure: CAL

8.1 Entry of calibration menu

In the measurement mode, pressing the two keys CAL and MODE simultaneously allows you enter the Calibration Information. If you do not need to re-calibrate the measurement system, press CAL to go back to measurement mode. If you need to re-calibrate the system, press ENTER to enter to the calibration setup menu.

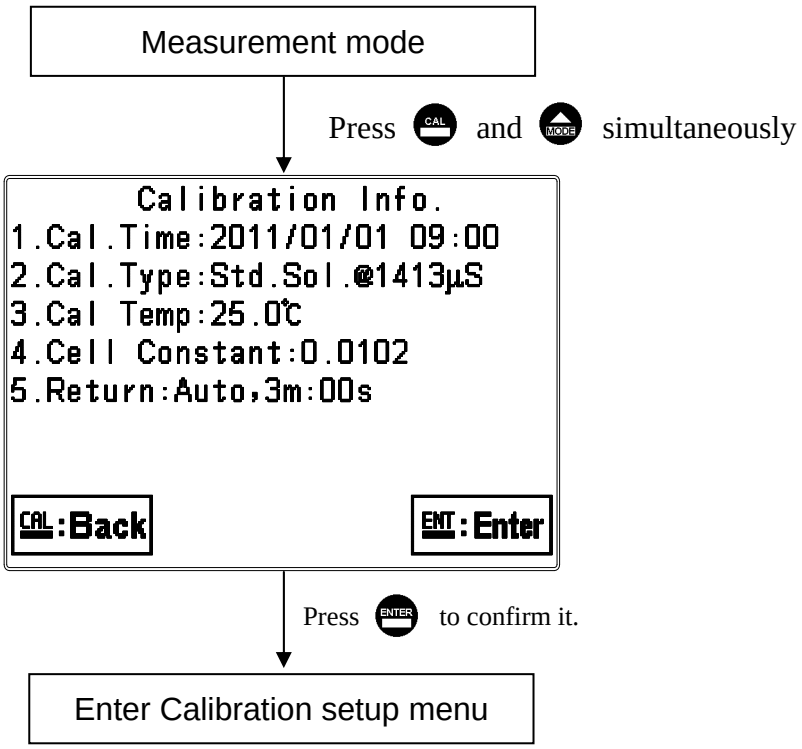

8.2 Security password of calibration (Code)

Select the Code (password) icon after entering calibration setup mode. Select to activate code function or not. **The default Calibration setting code is “1100”.**

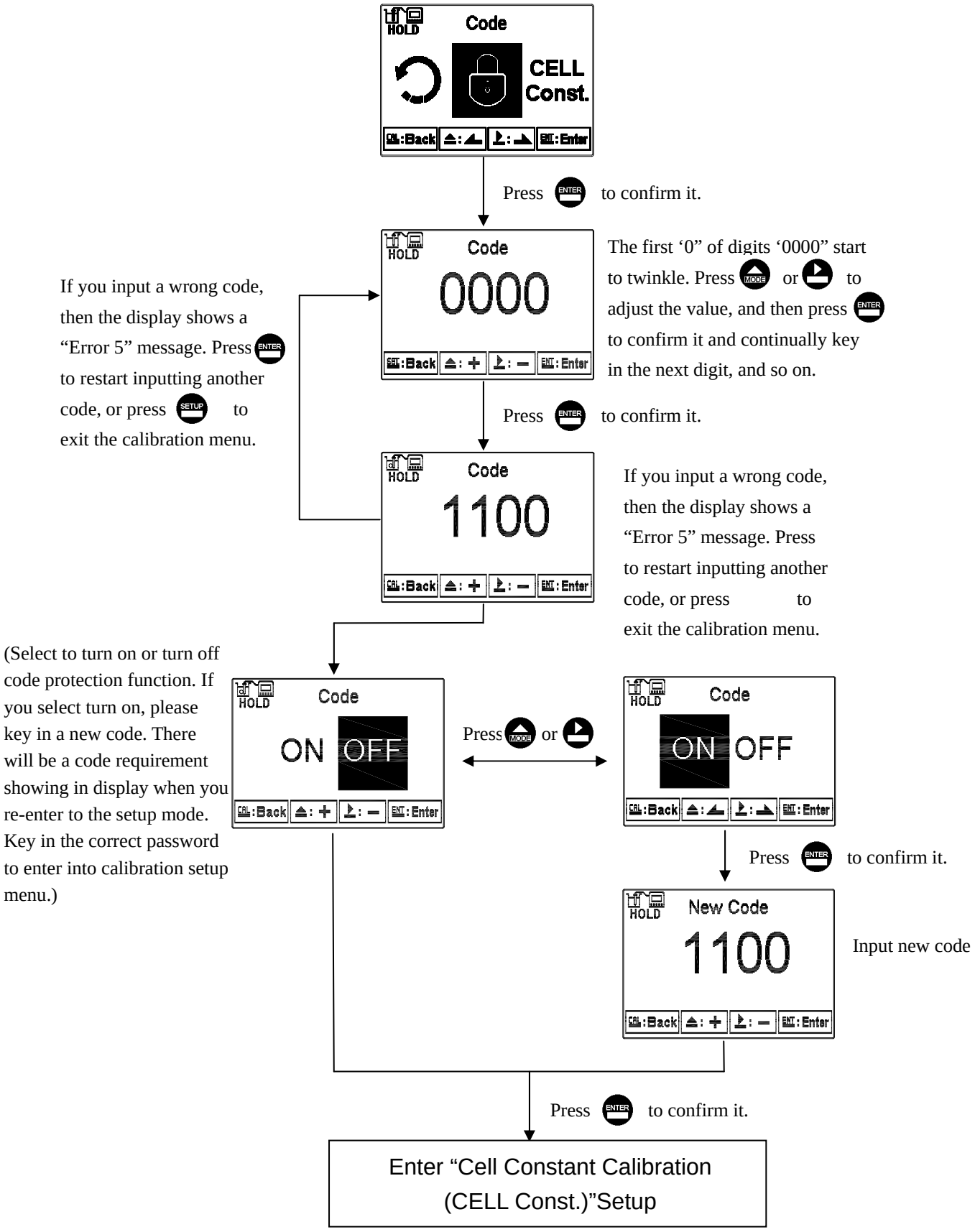

8.3 Cell constant calibration (CELL Const.)

8.3.1 Resistivity (Res)

Enter setup of cell constant to directly set cell constant. Press MODE or ▶ to select the preset value to near an appropriate one. There are three sets of preset value (0.01, 0.05, 0.10). Select the most appropriate cell constant value and press ENTER to confirm it and enter to the next screen. At the time, the cell constant starts to twinkle. Press MODE or ▶ to adjust the cell constant value. Correct the measurement value to known standard solution value by adjust cell constant, or set the known cell constant directly. Press ENTER to confirm it.

Resistivity cell constant setting range:	
0.0100	Adjustable range: 0.0080 ~ 0.0120
0.0500	Adjustable range: 0.0400 ~ 0.0600
0.1000	Adjustable range: 0.0800 ~ 0.1200

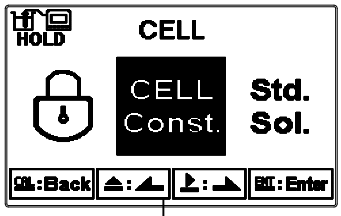

Press ENTER to confirm it.

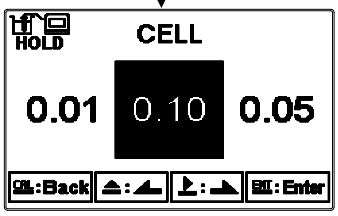

According to the cell constant of the resistivity sensor, press ▶ or MODE to select the nearest preset value.

Press ENTER to confirm it.

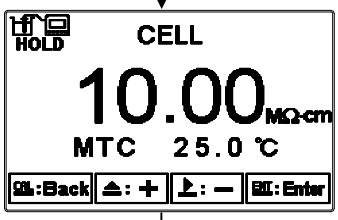

Under MTC temperature mode, press MODE or ▶ to adjust temperature value. If under ATC temperature mode(PTC or NTC), the temperature value is read automatically, and the instrument directly goes to next screen.

Press ENTER to confirm it.

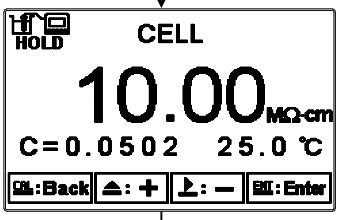

According to labeled cell constant of the resistivity sensor, press MODE or ▶ to adjust to the corresponding value. Press ENTER to confirm it.

Press ENTER to confirm it.

Enter “Standard solution calibtaion” mode

8.3.2 Conductivity (Cond)

Enter setup of cell constant to directly set cell constant. Press MODE or ▶ to select the preset value to near an appropriate one. There are four sets of preset value (0.01、0.10、0.50、10.00). Select the most appropriate cell constant value and press ENTER to confirm it and enter to the next screen. At the time, the cell constant starts to twinkle. Press MODE or ▶ to adjust the cell constant value. Correct the measurement value to known standard solution value by adjust cell constant, or set the known cell constant directly. Press ENTER to confirm it.

Conductivity cell constant setting range:	
0.0100	Adjustable range: 0.0080～0.1200
0.1000	Adjustable range: 0.0400～0.6000
0.500	Adjustable range: 0.0800～1.999
10.00	Adjustable range: 2.00～19.99

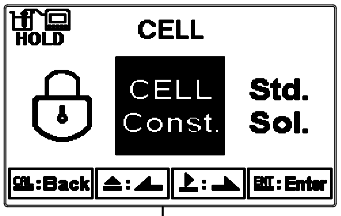

Press ENTER to confirm it.

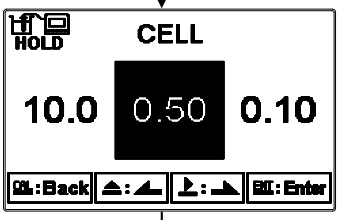

According to the cell constant of the resistivity sensor, press ▶ or MODE to select the nearest preset value.

Press ENTER to confirm it.

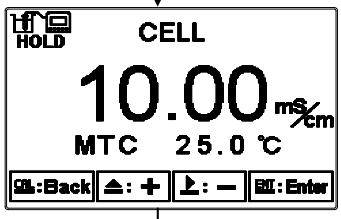

Under MTC temperature mode, press MODE or ▶ to adjust temperature value. If under ATC temperature mode(PTC or NTC), the temperature value is read automatically, and the instrument directly goes to next screen.

Press ENTER to confirm it.

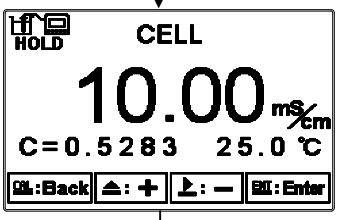

According to labeled cell constant of the conductivity sensor, press MODE or ▶ to adjust to the corresponding value. Press ENTER confirm it.

Press ENTER to confirm it.

Enter “Standard solution calibtaion” mode

8.4 Standard solution calibration (Std. Sol.)

Applying known standard solution for calibration is only suitable for conductivity measurement mode. Press MODE or ▲ to select from preset standard solution value. There are three preset value from 84.0µS/cm, 1413µS/cm, to 12.88mS/cm. After selecting proper preset value, put the cleaned conductivity sensor into standard solution, and press ENTER to enter the calibration screen. At the time, the conductivity value can be adjusted according to standard solution value. Press ENTER to initiate the calibration. The display shows the sign ⌛, and it starts the auto calibration procedure. After finishing calibration, the display automatically shows the cell constant after calibration. Press ENTER to exit.

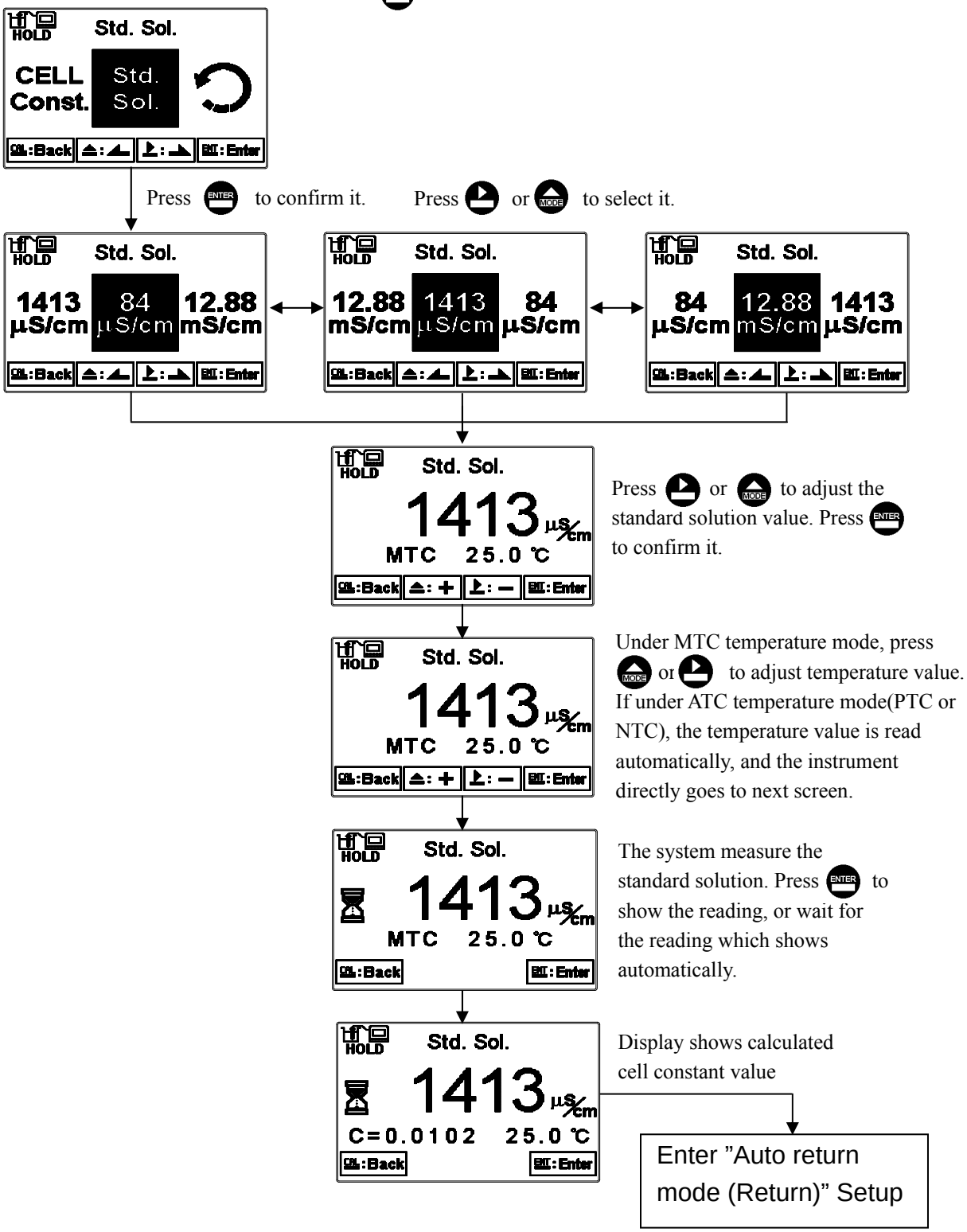

8.5 Return

Enter setup of auto return mode (Return) to set the function that the instrument automatically exit the setup menu after a period of time without pressing any key. The “Manual Exit” means that it needs to exit calibration setup menu manually, while “Auto” means that the display automatically exit the calibration setup menu and back to measurement mode after a period of time without pressing any key.

Note: the return function of setup menu and calibration setup menu are independent settings.

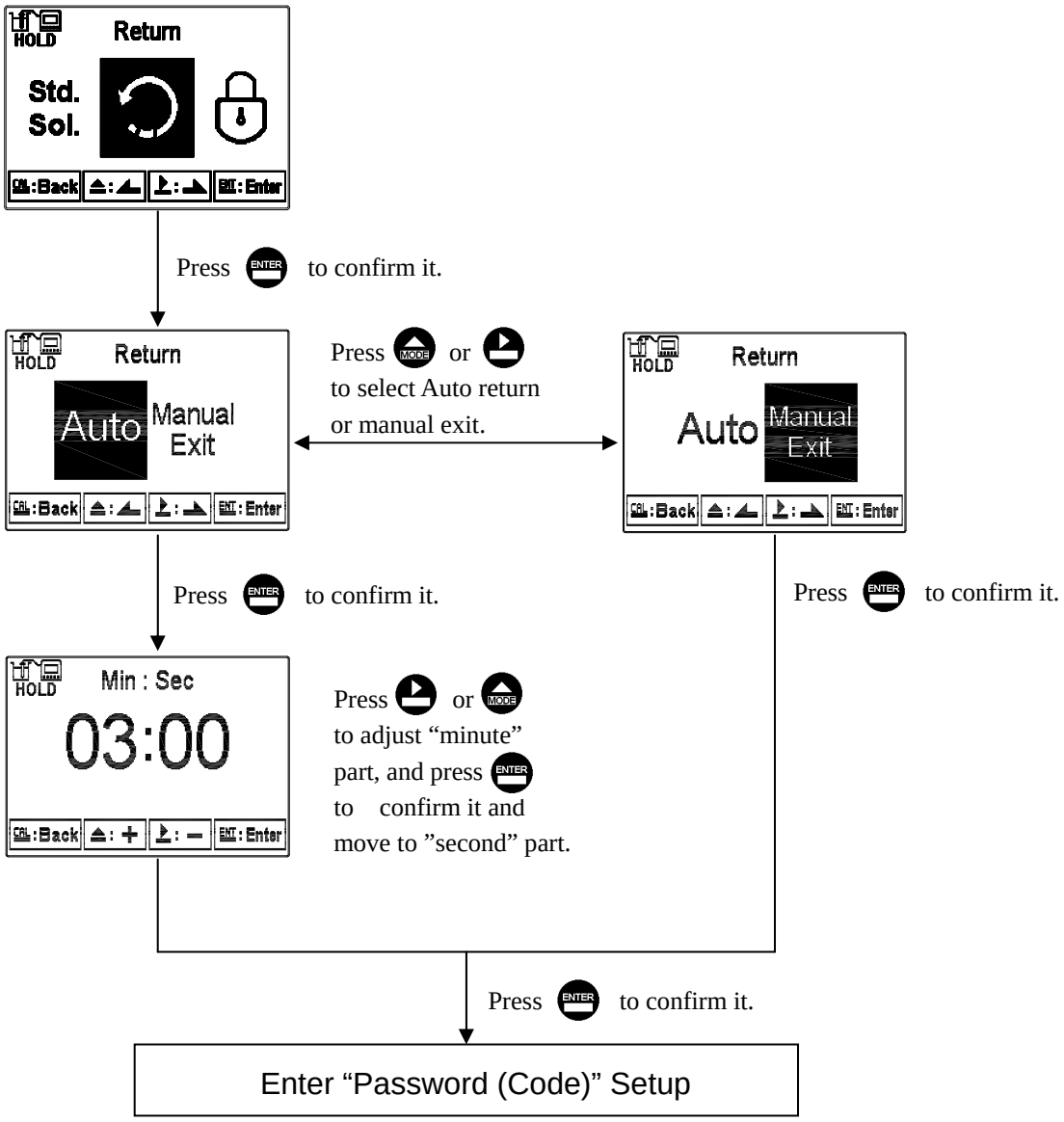

9. Modbus protocol and instructions

9.1 Introduction

Modbus communication protocol define one side as the master(main controlling machine), and the other side as the slave (receiver). The following content is, respectively, the Modbus command/response of the master(host)/Slave(sub-machine). Under Modbus structure, the master sends command message to the slave, and the slave return the corresponding message according to the quest of the master. The message which send from a master includes the slave's address (ID:1~247) or the broadcast address code(ID:0), the function code(the action that the master request), data(the data that the master request), the parity(check code, to provide the slave to judge whether the received data is correct or not). In the other hand, the slave receives the request message from the master, respond corresponding message to ensure the completeness of communication. When there occurs any error message, for example: mistake of data message, or the slave cannot compete the master's request, and then the slave respond an error message to inform the master. A communication network may contain master and many equipment units, and each unit has a specific address(ID) which cannot be repeated. If the slave receives message and confirms that the ID address is the same as its own one, then the slave responds to the master's request. The response message includes address (the slave's ID), function code (the same as the function code sent by the master), data and parity, etc. Under broadcast mode, the slaves do not make any response.

The transmitter applies standard MODBUS protocol, and supports RTU and ASCII two transmission modes, four baud rates(2400, 4800, 9600, and 19200), odd/even/none parity, and it allows Modbus protocol compatible Master(ex: PLC) or a controlling software from the third party to proceed data transmission.

It supports even parity verification and allows PLC, RTU, SCADA system or the third parity monitor software which is compatible with MODBUS protocol to proceed practical information and data transmission. With the ability of the transmitter, you only need to add a set of central communication controlling display software to establish a set of controlling communication network system. It will be convenient to the system monitoring and controlling and for data collection. The follows is the introduction of rules and functions of Modbus protocol. There are also part of descriptions and with the original descriptions of Modbus document.

9.2 Modbus rule

1. All the RS-485 communication loops follow Master/Slave way. According to this way, data can be transmitted from a Master (ex: PC) to a Slave (ex: EC-4110RS).

2. The master can initialize and control all the information transmission within the RS-485 loop.
3. All the communication cannot start from a Slave.
4. All the communication within the RS-485 loop is necessary to match the Modbus information frame.
5. If the Master or the slave receives the information frame which is included unknown command, the master or the slave does not respond. Which message format is a byte (data frame) composed of a string.

9.3 Data frame format and data command

The communication transmission is in an Asynchronous way, and the unit of it is byte (data frame). Each data frame is in an 11 bits (MODBUS RTU) or 10 bits (MODBUS ASCII) sequence data procedure.

Data frame format(byte):

bit	Modbus RTU	Modbus ASCII
Start bit	1 start bit	1 start bit
Data bits	8 data bits	7 data bits
Parity bit	1 bit for even/odd parity, no bit for no parity	
Stop bits	1 stop bit if parity is used, 2 bits if no parity	

9.4 EC-4110RS communication protocol

When a communication command which is sent by a Master is received by the transmitter(slave), only the corresponding address code of the device accepts the communication command. If not wrong, then the transmitter performs the corresponding task; then the transmitter sends the implementation result back to the sender(Master). The returned information includes an address code, a function code which performs actions, data after performing actions, a check code (CRC or LRC) which checks errors. If there is an error, the transmitter send corresponding error message. The Master/Slaves continue to proceed “Query–Response Cycle” to achieve the goal of monitor & control. The illustration is as follows:

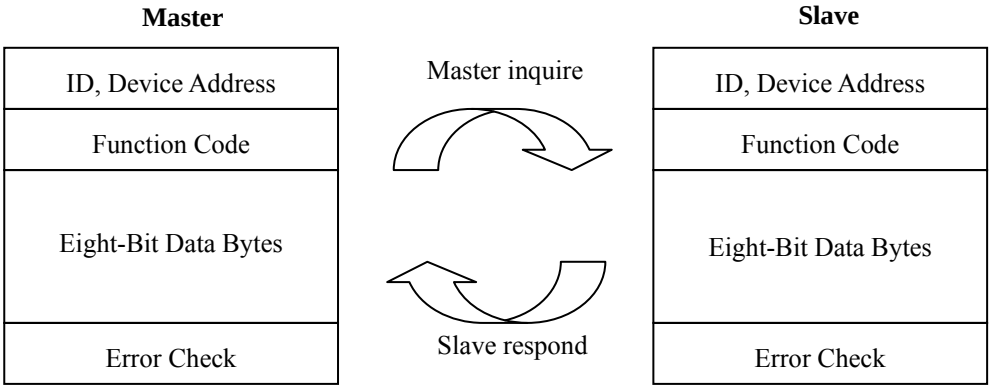

9.4.1 Message Framing

RTU

Start	Address	Function	Data	CRC	End
≥3.5 byte time	Address code 1 byte	Function code 1 byte	Data field N bytes	Check code 2 bytes	≥3.5 byte time

Under RTU mode, N=0~252 bytes. Hence, the max. length of the info data is 256 bytes.

Note: CRC check code is CRC(LO) in the front, and CRC(HI) in the post.

ASCII

Start	Address	Function	Data	LRC	End
: 1 bit	Address code 2 bits	Function code 2 bits	Data field N bits	Check code 2 bits	CR,LF 2 bits

Under ASCII mode, N=0~504(2*252) bits. Hence, the maximum length of the info data is 513 bits (char).

9.4.2 Address code

Each slave has its one and only address code. That the master sends the address indicates only the slave with the specific address code can receive the message and responds to the master. The slave returns the address to prove which the slave belongs.The ID range of the transmitter is from 1~247. The address 0 is broadcast mode, and the transmitter supports broadcast mode.

Note: When the RS-485 structure network also supports other Modbus type equipment, it has better to use the broadcast mode carefully.

9.4.3 Function code

In the original Modbus protocol definition, there are many command functions on the substance of duplication. Base on the reason, the EC-4110RS only supports some of the function codes. When starting communication, the Master sends the request through function code to tell the Slave to perform which actions. The Slave responds function which is the same as that sent by the Master to indicate the Slave has already responded to the Master and has performed the action. The range of function code is 1~255. In between, the function code 128~255 are defined as abnormal responding function code. The function codes which the slaves normally respond are the same as those from the Master. The highest bit(MSB) is 0. When the slaves respond abnormal message, the lowest bit(LSB) of function codes is the same as those of the master, however, the highest bit(MSB) of the function codes are set to be 1. It means that there occurs a error when executing the function codes.

The following table lists the function codes supported by EC-4110RS

Function code	Definition	Operation
01H Read Coil Status	Reads the ON/OFF status of discrete coils in the slave	Read the status of one or more discrete contacts
03H Read Holding Registers	Read the binary contents of holding registers in the slave	Read one or more data register value
05H Write Single Coil	Writes a single coil to either ON or OFF.	Set the status of discrete individual contacts to the specified address
06H Write Single Register	Writes a value into a single holding register	Set a single 16-bit data register
0FH Write Multiple Coils	Writes each coil in a sequence of coils to either ON or OFF	Set the status of multiple discrete continuous contacts to the specified address
10H Write Multiple Registers	Writes values into a sequence of holding registers	Set multiple sequence of 16-bit data register
08H Diagnostics	Diagnostics function	The assessment of network communication capability

9.4.3.1 Function code 01H (Read Coil Status)

The function code is for reading the consecutive contact state discrete volume from the slave. 01H does not support broadcast mode.

Type		RTU	ASCII	Example (RTU)
Function		1 byte	2 Characters	01H Read the contact state discrete volume
DATA Field	The starting address of the contact number	2 bytes	4 Characters	0070H The contact numbers to read the starting address is 0070H
	The number of contact	2 bytes	4 Characters	0003H Start to read three consecutive contact state discrete volume from 0070H

Normal response format:

Type		RTU	ASCII	Example (RTU)
Function		1 byte	2 Characters	01H Response to the function code
DATA Field	Number of bytes	1 byte	2 Characters	01H The number of data bytes
	The contact state discrete value	N bytes	2*N Characters	03H Set of state of contact discrete value. Ex: 03H. If the number of contacts is not a multiple of 8, it will be times 10(add 0 in the back) until it is of 8.

For abnormal response please refer to abnormal data format.

Important: To see the detailed operation address of EC-4110RS, please refer to the corresponding address list of function code 01H.

9.4.3.2 Function code 03H(Read Holding Registers)

The function code is for reading the consecutive 16 bits register data of the slave. 03H does not support broadcast mode.

Sending format:

Type		RTU	ASCII	Example (RTU)
Function		1 byte	2 Characters	03H Read register data
DATA Field	The starting address of the register	2 bytes	4 Characters	0004H Read the starting address of register address 0004H
	Number of registers	2 bytes	4 Characters	0003H Start from 0004H to read three consecutive 16 bits register data

Normal response format:

Type		RTU	ASCII	Example (RTU)
Function		1 byte	2 Characters	03H Response Function Code
DATA Field	Number of bytes	1 byte	2 Characters	06H The number of data bytes
	Register value	N bytes	2*N Characters	030605040303H Returns three 16-bit register data

For abnormal response please refer to abnormal data format.

Important: To see the detailed operation address of EC-4110RS, please refer to the corresponding address list of function code 03H.

Note: Due to all the floating-point data of the EC-4110RS are in a 32 bits IEEE 754 format. The high bit is in front, and the low bit in post.

9.4.3.3 Function code 05H (Write Single Coil)

The function code is for setting single state discrete contacts to the slave. 05H does not support broadcast mode.

Sending format:

Type		RTU	ASCII	Example (RTU)
Function code		1 byte	2 Characters	05H, set the status of discrete individual contacts
DATA Field	Contact number address	2 bytes	4 Characters	0076H, set single contact number address as 0076H
	The discrete status of contact	2 bytes	4 Characters	0000H or FF00H, in between 0000H indicates OFF，FF00H indicates ON

Normal response format is the copy of the sending format. It returns when successfully set the discrete status of contact. For abnormal response please refer to abnormal data format.

9.4.3.4 Function code 06H(Write Single Register)

The function code is for setting single register value to the slave. 06H supports broadcast mode.

Sending format:

Type		RTU	ASCII	Example (RTU)
Function code		1 byte	2 Characters	06H, Set the value of a single register
DATA Field	Register address	2 bytes	4 Characters	000AH, Set a single register address as 000AH
	Register data	2 bytes	4 Characters	0003H, Set a single register address as 0003H

Normal response format is the copy of the sending format. It returns when successfully set the discrete status of contact. For abnormal response please refer to abnormal data format.

Important: To see the detailed operation address of EC-4110RS, please refer to the corresponding address list of function code 06H.

9.4.3.5 Function code 0FH(Write Multiple Coils)

The function code is for setting continuous state discrete contacts to the slave. 0FH does not support broadcast mode.

Sending format:

Type		RTU	ASCII	Example（RTU）
Function code		1 byte	2 Characters	0FH Set the status of discrete individual contacts
DATA Field	Contact starting address	2 bytes	4 Characters	0076H Set multiple consecutive contacts starting address as 0076H
	The number of contact	2 bytes	4 Characters	0003H To indicate to set three numbers of contact
	The number of bytes	1 byte	2 Characters	01H To set the number of information byte of contact discrete status
	The discrete status of multi-con tact	N bytes	2*N Characters	03H Set of discrete contact state information. If the number of contacts is not a multiple of 8, it will be times 10(add 0 in the back) until it is of 8

Normal response format is the copy of the sending format. It returns when successfully set the discrete status of contact. For abnormal response please refer to abnormal data format.

Important: To see the detailed operation address of EC-4110RS, please refer to the corresponding address list of function code 0FH.

9.4.3.6 Function code 10H (Write Multiple Registers)

The function code is for setting multi-consecutive register value to the slave. 10H supports broadcast mode.

Sending format:

Type		RTU	ASCII	Example (RTU)
Function		1 byte	2 Characters	10H To set multi-consecutive register data
DATA Field	Register starting address	2 bytes	4 Characters	0007H Set multiple consecutive contacts starting address as 0007H
	The number of register	2 bytes	4 Characters	0003H To indicate to set three consecutive 16 bits register numbers
	The number of bytes	1 byte	2 Characters	06H To set the information bytes number of multi-consecutive register
	Register data values	N bytes	2*N Characters	030505030303H To set the input of three 16 bits data 0305H, 0503H, 0303H

Normal response format is the copy of the sending format. It returns when successfully set the discrete status of contact. For abnormal response please refer to abnormal data format.

Important: To see the detailed operation address of EC-4110RS, please refer to the corresponding address list of function code 10H.

9.4.3.7 Function code 08H (Diagnostics)

The function code, 08H, is for diagnostic function. It can be counted packets of every state to evaluate transmission capacity of RS-485 communication.

The function code 08H provides a series of sub-function code. The EC-4110RS supports sub-function code 0A-12H. The function code 08H does not support broadcast mode.

Sending format:

Type		RTU	ASCII	Example（RTU）
Function code（CS）		1 byte	2 Characters	08H Diagnostic function
DATA Field	Sub-function code	2 bytes	4 Characters	000AH Clear counters
	Data	2 bytes	4 Characters	0000H Sub-function code 0A-12H is fixed to 0

Normal response format:

Type		RTU	ASCII	Example（RTU）
Function code		1 byte	2 Characters	08H Response function code
DATA Field	2 bytes	2 bytes	4 Characters	000AH Response sub-function code
	2 bytes	2 bytes	4 Characters	0000H Back to the counter value Only sub-function code 0A is able to copy the data and to send the information

For abnormal response please refer to abnormal data format.

Important: To see the detailed operation address of EC-4110RS, please refer to the corresponding diagnostics function of function code 08H.

9.4.4 Data field

Data field varies with the function code. Whether address or register, the information is high byte first and low byte in the post. The byte sets of the ASCII are twice than those of RTU mode.

9.4.5 Check code

Check code is used to detect whether data frame is error or not. If the data frame is error, the data does not work. It ensures the safety and efficiency of the system. RTU mode uses CRC (loop redundant) to check. ASCII mode uses (Longitudinal Redundancy) LRC to check

9.4.6 Abnormal procedure

EC-4110RS will response abnormal information frame when it detects error which except verification error and length of byte error. The minimum byte(LSB) of function code is the same as it of the master, however, the maximum byte (MSB) of function code is 1. It means that the function code which is responded by remote equipment occur has errors. is based on the function code which is sent by master add 128.

Abnormal response frame:

Function code		Abnormal code
MSB: 1	LSB: Original LSB	01 or 02 or 03 or 04

Abnormal code 01: illegal function code

The EC-4110RS does not support the function code received.

Abnormal code 02: illegal data address

The EC-4110RS do not support the designated data address.

Abnormal code 03: illegal statistics value

The data which is input to designated address of EC-4110RS is illegal value.

Abnormal code 04: abnormal data input

Failed to input data to EC-4110RS, and it result to unrecoverable error.

9.5 Communication connection

The RS-485 communication port of the transmitter features with electronic isolation protection, lightning protection, and to provide internal independent ground solution. It is allowed to use normal twisted-pair (segregation double-stranded twisted pair cable) cable connections. All devices are in contact with a double-stranded, and then all together, and another line will be connected with all the negative contacts, and the isolated shield wire must be connected to GND. When we talk about communication in the laboratory, the stand-alone master-slave communication is relatively simple. Hence, it is allowed to consider using the normal cable instead. However, there should be strictly in accordance with the requirements of industrial engineering construction. Wiring diagram is as follows:

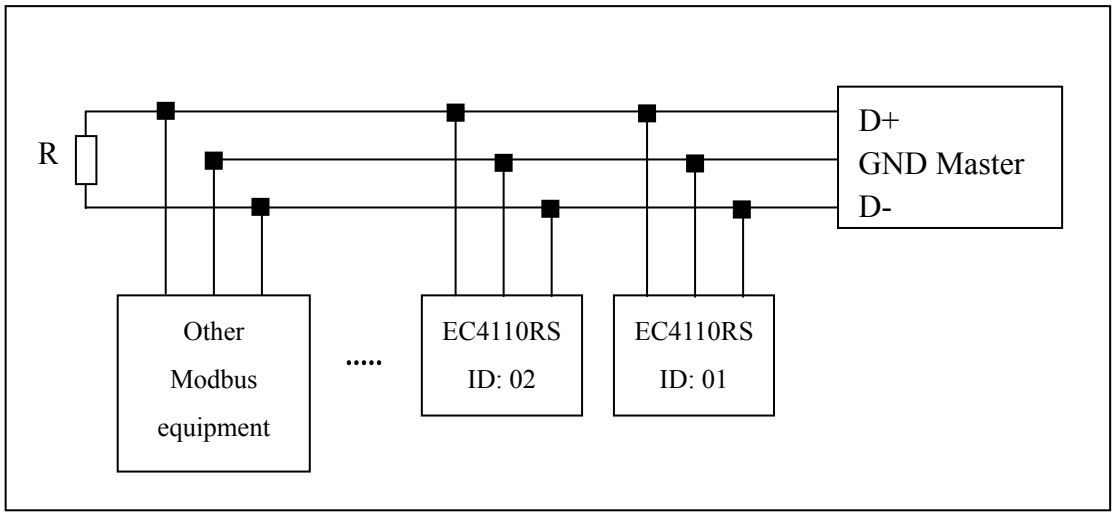

Note:

1. The RS-485 interface of EC-4110RS transmitter has a protective earth terminal. When communicate with the RS-485, there should use with solution ground to eliminate risk of safety.
2. It is allowed to use a 120 ohm impedance matching resistors at terminal equipment in the transmission lines (D +, D-) ends across to effectively reduce or eliminate signal reflection.
3. Without repeaters, the RS-485 network can not exceed a maximum of 32 nodes. The maximum communication transmission distance of RS-485 is up to 1200 meters.
4. When communication, all the equipments of the network should be maintained in the same transfer mode, baud rate, parity consistent. And each of the device address can not be the same, so as not to conflict resulted in the normal network communications.
5. The Modbus command of the transmitter can only access 50 registers. If it exceeds the length, then it returns abnormal message.

9.6 MODBUS name and address table

Function Code：03H, 06H, 10H Modbus response (setup parameter)

Logic address	Item	Number of Byte	Information type	Description of data transmission	Default value	Note
0001H	Equipment's ID	2	USHORT	1-247	1	
0002H	Transmitter model	6	USHORT	ASCII Code	EC-4110	
0005H	Communication protocol	2	USHORT	0: RTU	0	
				1: ASCII		
0006H	Serial transmission speed (Baud rate)	2	USHORT	0: 2400	3	
				1: 4800		
				2: 9600		
				3: 19200		
0007H	Parity	2	USHORT	0: None	1	
				1: Even		
				2: Odd		
0008H	Real-time clock*	12	USHORT	Second	2010-1-01, 00:00:00	
0009H			USHORT	Minute		
000AH			USHORT	Hour		
000BH			USHORT	Day		
000CH			USHORT	Month		
000DH			USHORT	Year		
000EH	Code setting*	2	USHORT	Code setting	1111	
000FH	Temperature mode*	2	USHORT	0: MTC	0	
				1: PTC		
				2: NTC		
0010H	WASH relay*	2	USHORT	0: OFF	0	
			USHORT	1: AUTO		
0011H		2	USHORT	ON.S: 0-5999	0	Second
0012H		2	USHORT	OFF.H: 0-999	0	Hour
0013H		2	USHORT	OFF.M：0-59	0	Minute
0014H		2	USHORT	DB.S: 0-5999	0	Second
0015H	Relay 1 *	2	USHORT	0: OFF	1	
				1: AUTO		
0016H		2	USHORT	0: Hi	0	
				1: Lo		
0017H		4	FLOAT	SP1	100.0mS	Data

0019H		4	FLOAT	DB1	10.0mS	affected by sign byte
001BH	Relay 2 *	2	USHORT	0：OFF 1：AUTO	1	
001CH		2	USHORT	0：Hi 1：Lo	1	
001DH		2	FLOAT	SP2	10.0mS	Data affected by sign byte
001FH		2	FLOAT	DB2	1.00mS	

0021H	Backlight Brightness *	2	USHORT	0：AUTO 1：ON 2：OFF	2	
0022H		2	SHORT SHORT SHORT SHORT SHORT	2：Highest bright 1：high bright 0：Standard -1：Low bright -2：Lowest bright	0	
0023H	Backlight Sensitivity*	2	SHORT SHORT SHORT SHORT SHORT	2：Highest Sensitivity 1：High Sensitivity 0：Standard -1：Low Sensitivity -2：Lowest Sensitivity	0	
0024H	Sample average of measurements (Digital Filter) *	2	USHORT	1-60	5	
0024H-0030H	Factory reserved					

Note : The actions without * sign only support for function code 03H. The actions with * sign support function code 03H, 06H, 10H. USHORT data range from 0 to 65535, SHORT data range from -32768 to 32767. FLOAT is a 4 data bits IEEE format float. The data range follows is the same.

Function code: 03H Modbus response (measurement parameter)

Logic address	Item	Number of Byte	Information type	Description of data transmission	Default value	Note
0031H	Number of measurement channels	2	USHORT	EC-4110RS only has one channel	1	
0032H	Sign byte	6	CHAR	pH ORP(mV) uS/cm mS/cm MΩ-cm ppt ppm mg/l % mA ˚C NTU FNU FTU		ASCII code
0035H	pH/ORP measurement	4	FLOAT	Res/Cond measurement		Data affected by sign byte
0037H	Temperature measurement	4	F LOAT	Temperature measurement		
0039H-0050H	Factory reserved					

Function code: 01H,05H,0FH Modbus response (dispersion parameter)

Logic address	Item	BIT	Description	Default value	Note
0070H	LO Alarm	1	Contact on	0 (Contact off)	
0071H	Hi Alarm	1	Contact on	0 (Contact off)	
0072H	MA too high	1	Contact on	0 (Contact off)	
0073H	MA too low	1	Contact on	0 (Contact off)	
0074H	Exceed temp. range	1	Contact on	0 (Contact off)	
0075H	Exceed pH/ORP range	1	Contact on	0 (Contact off)	
0076H	RLY1 Action *	1	Contact on	0 (Contact off)	
0077H	RLY2 Action*	1	Contact on	0 (Contact off)	
0078H	WASH Action*	1	Contact on	0 (Contact off)	
0079H-0090H	Factory reserved				

Note: The actions without * sign only support for function code 01H.

The actions with * sign support function code 01H, 05H, 0FH.

Function code: 08H Correlated diagnostic function

Sub function code	Name of Counter	Note
0AH	Clear all the counters	Clear Counters and Diagnostic Register
0BH	Return Bus Message Count	The response data field returns the quantity of message that the slave has detected on the communications system since its last restart or last clear counters operation, or being powered-up. It counts whether the address comes from the remote equipment or not,.
0CH	Return Bus Communication Error Count	The response data field returns the quantity of CRC errors encountered by the slave since its last restart, clear counters operation, or power-up. It counts whether the address comes from the remote equipment or not,.
0DH	Return Bus Exception Error Count	The response data field returns the quantity of Modbus exception responses returned by the slave since its last restart, clear counters operation, or power-up. It only counts when the address comes from the remote equipment.
0EH	Return Slave Message Count	The response data field returns the quantity of messages addressed to the slave, or broadcast, that the slave has processed since its last restart, clear counters operation, or power-up. It only counts when the address comes from that remote equipment.
0FH	Return Slave No Response Count	The response data field returns the quantity of message addressed to the slave for which it returned no response (neither a normal responses nor an exception response), since its last restart, clear counters operation, or power-up. It is said that the counter will calculate the quantity of none-error broadcast messages.
10H	Return Slave NAK Count	The response data field returns the quantity of message addressed to the slave for which it returned a Negative Acknowledge (NAK) exception response since its last restart, clear counters operation, or power-up.
11H	Return Slave Busy Count	The response data field returns the quantity of message addressed to the slave for it returned a Slave Device Busy exception response, since its last restart, clear counters operation, or power-up.
12H	Return Bus Character overrun Count	The response data field returns the quantity of messages addressed to the slave that it could not handle due to a character overrun condition ,since its last restart, clear counters operation, or power-up.

10. Error messages (Error code)

Messages	Reason	Dispositions
Error1	The readout is unstable when calibration	1. Replace with new standard solution 2. Maintain the electrode or change a new electrode, and make another calibration
Error2	Cell constant of the electrode exceeds the upper or lower limit	1. Replace with new standard solution 2. Maintain the electrode or change a new electrode, and make another calibration
Error Code	Wrong password	Re-enter a password
Error9	Serious error that does not permit any further measuring	Please call service engineer.

11. Installation of cells

11.1 Appearance of cells

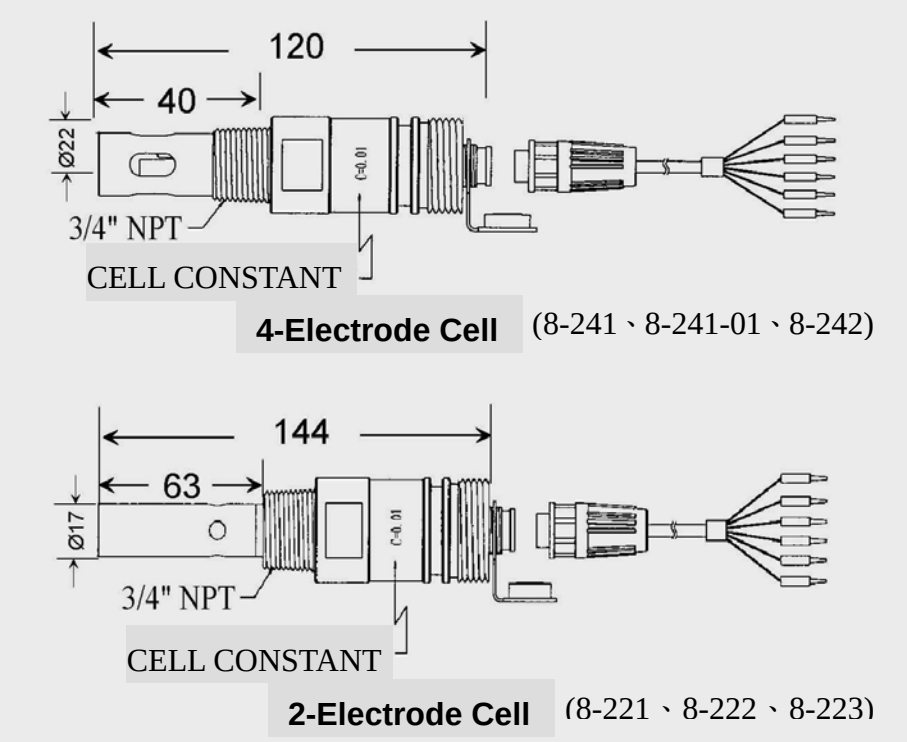

11.2 Correct installation

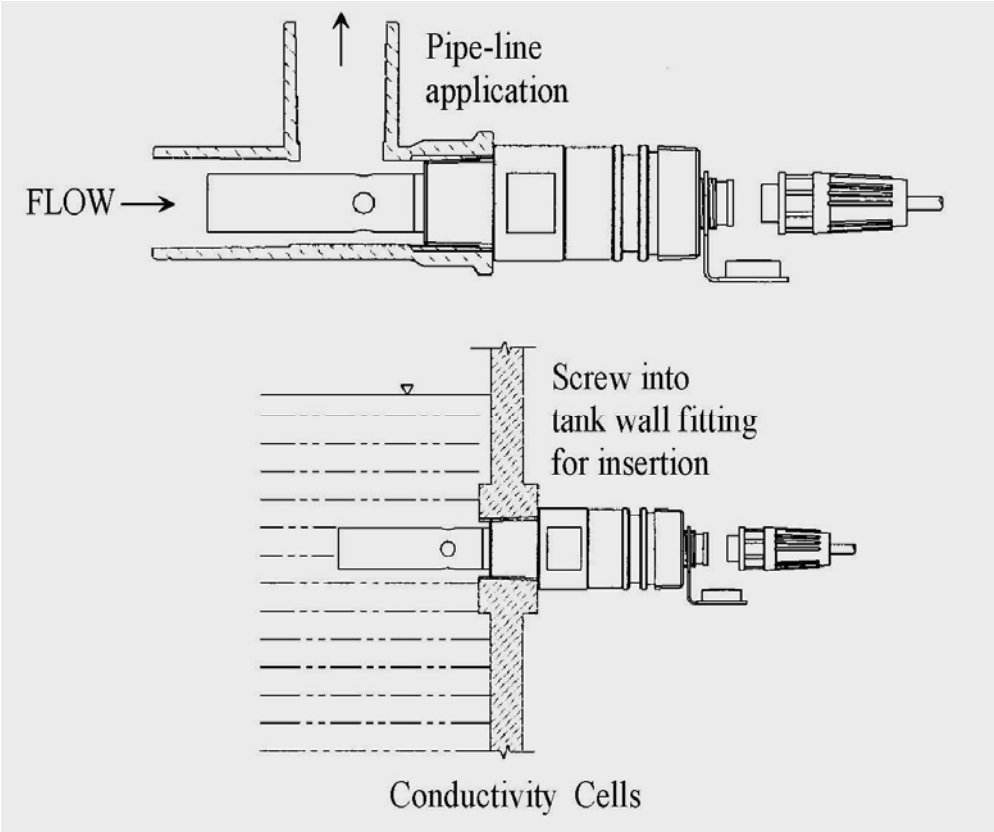

11.3 Incorrect installation

11.3 .1 Insufficient immersion: The installation is easy to result in stagnant water inside
the cell and thus lead to measurement error.

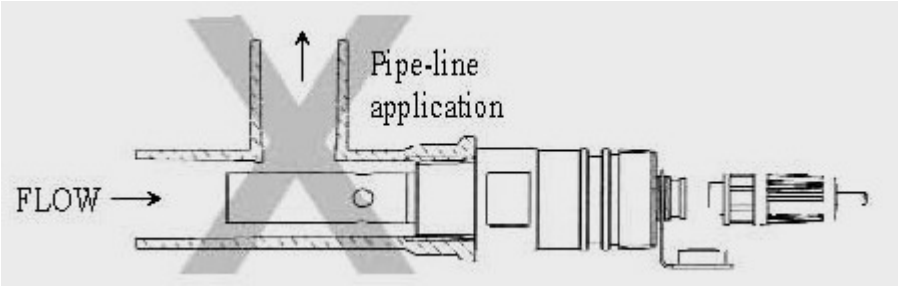

11.3.2 Insufficient water flow: The installation is prone to error measurement due to insufficient water flow.

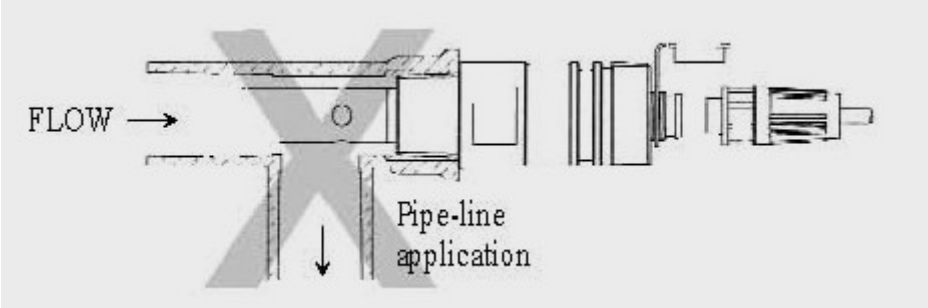

11.3.3 Insufficient immersion: The installation is easy to result in stagnant water inside the cell and thus lead to measurement error.

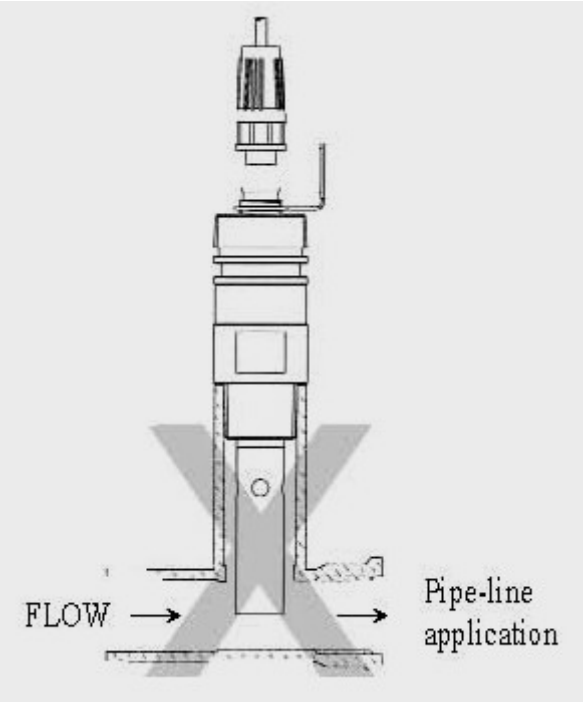

SUNTEX

SUNTEX INSTRUMENTS CO., LTD.

13F, No. 31, Lane 169, Kangning St.,
Xizhi Dist., New Taipei City, Taiwan (R.O.C.)
Tel: 886-2-2695-9688
Fax: 886-2-2695-9693
e-mail: suntex@ms1.hinet.net

www.suntex.com.tw/en

5040C EC-4110RS/Technical data subject to alternations/ Quality Systems ISO 9001/201205