IT-8100-RS Microprocessor ION Transmitter

Operation Manual

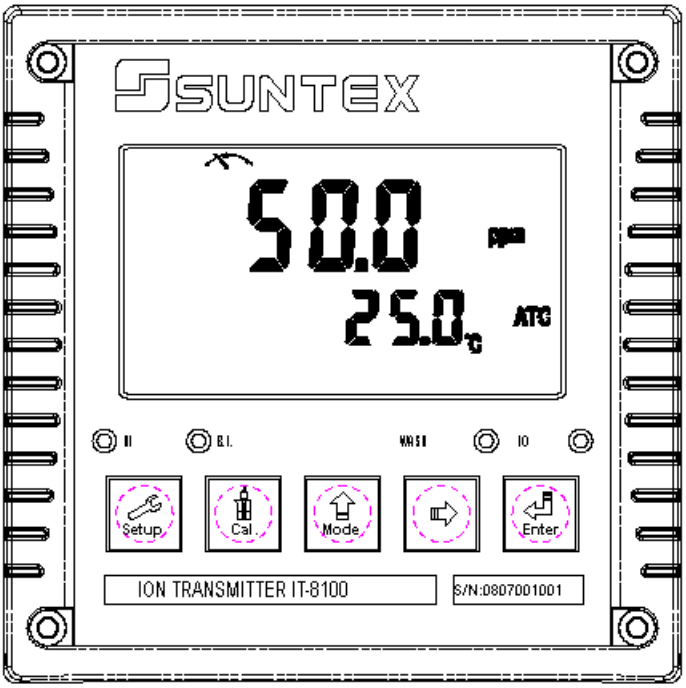

SUNTEX

CONTENTS

Precautions for installation

Wrong wiring will lead to breakdown or electrical shock of the instrument, please read this operation manual clearly before installation.

- Make sure to remove AC power from the controller before wiring input, output connections, and remove it before opening the controller housing.
- The installation site of the controller should be good in ventilation and avoid direct sunshine.
- The material of signal cable should be special coaxial cable. Strongly recommend using our coaxial cable. Do not use normal wires instead.
- Avoid electrical surge when using power. Especially when using three-phase power, use ground wire correctly.
- **The internal relay contact of the instruments is for alarm or control function. Due to safety, please must connect to external relay which can stand enough ampere to make sure the safety operation of the instruments.（Please refer to chapter 3.5 “Illustration of electrical connection”）**

Brief Instruction

Settings of measurement parameters (see chapter 6)

Setup + Mode — In measurement mode, pressing "Setup" and "Mode" simultaneously allows you to access Set-up mode.

If you like to use security code of settings, the original code is 1111.

CodE SEt — In the Code function, entering original code or user's designated code allows you to reset the code or shut down this function.

ConF SEt — In the Configuration function, select measurement unit among ppm, mg/l and mV.

Arn SEt — In the Auto range function, select auto range, or select manual range gear.

oC SEt — In the Temperature function, setup temperature or make temperature correction.

tc SEt — In the Temperature compensation coefficient function, setup temperature compensation coefficient.

rLY1 SEt — In the Relay 1 function, please select AUto rLY1 or oFF rLY1 to activate it or not.

rLY2 SEt — In the Relay 2 function, please select AUto rLY2 or oFF rLY2 to activate it or not.

CLn SEt — In the Clean function, please set wash time and stop duration.

ion SEt — In the main measurement output function, please set analog output with 4-20 SEt or 0-20 SEt

SErL SEt — In the serial output function, please set MODBUS, parity, baud rate, and ID number.

SEC SEt — In the Second function, please set average measurement reading time.

b.L. SEt — In the Back light function, please set brightness of display and sensitivity of light-source sensor.

Settings of Calibration (see chapter 7)

Cal. + Mode — In measurement mode, pressing "Cal." and "Mode" simultaneously allows you to access Calibration mode.

If you like to use security code of calibration, the original code is 1111.

CodE SEt — In the Code function, entering original code or user's designated code allows you to reset the code or shut down this function.

tYPE : Set up ion type. (Please see chapter 7.4)

CC1 : Concentration standard solution calibration—CC (Please see chapter 7.5)

CA1 : Offset calibration—CA (Please see chapter 7.6)

Ion type set-up

Valence of ion types are divided into $X^{--}/X^{-}/X^{+}/X^{++}$. When you measure ion in X^{-} or X^{+} (valence=1), for example "F^{-}", please set the valence =1 in the ion type set-up. When you measure ion in X^{--} or X^{++}(valence=2), for example "Ca^{++}", please set the valence =2 in the ion type set-up.

Note: Slope limitation for ion valence =1: 40～70mV.

Slope limitation for ion valence =2: 20～35mV.

1.Enter ion type set-up, press Enter to enter next page.

2.Base on your measured ion valence, press Mode or ⇨ to set valence number. Press Enter to confirm it.

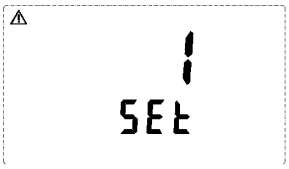

Concentration standard solution calibration—CC

1. Enter CC1 set-up, clean the sensor with de-ionized water or pure water until the potential which shows in display more than 320mV. Then, put the sensor into concentration standard solution, steadily stir the solution, press Enter to confirm it and enter into ion concentration range selection.

2. Press Mode or ⇨ to select appropriate measuring range. Press Enter to activate the procedure. Press Mode or ⇨ to adjust the value until it is the same with standard solution's value. Press Enter to start the calibration. After finishing the calibration, enter to the CC2 second point.

3. Enter CC2 set-up. The second point calibration please refer to step1~2. After finishing second point calibration, enter to CC3 set-up.

4. Enter CC3 set-up. Press Mode at the time to finish the calibration as two points calibration. For the third point calibration please refer to step1~2. After finishing third point calibration, enter next page.

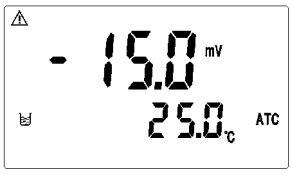

5. When the calibration is successful, the display screen shows the word “CAL PASS”; when the calibration is unsuccessful, the display screen shows the word “CAL Err”. (Please refer to chapter 10 for error message, causes and treatment seeking.)

6. The display automatically shows OS1(zero-point potential) value and press Enter to show SLP1(slope) value after calibration. Continuously press Enter to shows OS2(zero-point potential for second-point) and SLP2(slope of second point). You may press Enter to re-make a CC calibration for repeating calibration step 1~4, or press Cal. to back to measurement mode.

Offset calibration—CA

If there is difference between online measurement value and laboratory measurement value, you may leverage CA (Offset) calibration mode to correct difference value. However, before CA calibration, the CC calibration must be done in advance.

1. Enter CA1 calibration set-up, press Enter to start the procedure.

2. Enter concentration range selection, press Mode or ⇨ to select appropriate range. Press Enter to activate the procedure. When the value twinkles in the display, press Mode or ⇨ to adjust the value until it is the same with the value of standard solution. Then, press Enter to confirm it to finish the CA calibration and automatically back to measurement mode.

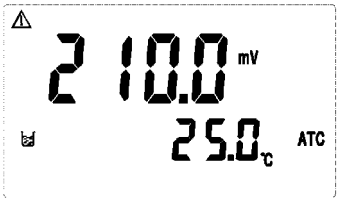

Note

Due to the need for continuous improvement of the transmitter function, we reserve the right to modify the content and the icon of the function. The actual icons and contents are subject to the instrument without notice.

1. Specifications

Model		IT-8100RS
Measuring modes		Concentration（ppm, mg/l）/mV/Temp
Ion type		X^{--} / X^{-} / X^{+}/ X^{++}
Measuring range	Concentration	Auto range: 0~19999ppm Manual: 0.00 ~ 19.99ppm / 0.0 ~ 199.9ppm / 0 ~ 19999ppm
	mV	-1999.9~1999.9mV
	Temp.	-10.0~110.0°C
Resolution	Concentration	0.01 / 0.1 / 1
	mV	0.1
	Temp.	0.1
Repeatability		±10% of reading (Depends on ISE sensor and sample)
Accuracy	mV	-1000 mV~1000 mV: ±1mV Under -1000 mV / Over +1000 mV: ±0.1% ±1mV
	Temp.	±0.2°C±1Digit (with temperature error-correction function)
Temperature compensation		Automatic with PT-1000 / NTC-30K or manual adjustment
Calibration mode		2 or 3 points calibration, Offset calibration (13 range selectable)
Ambient temperature		0~50°C
Storage temperature		-20~70°C
Input impedance		> 10^{12} Ω
Display		LCD display with sensitization sensor for auto/manual illumination function
Analog output		Isolated DC 0/4~20mA corresponding to Ion concentration, max. load 500Ω
Serial interface		RS-485 (Modbus RTU or ASCII)
Setting	Contact	240VAC, 0.5A Max.
	Activate	Hi/Lo two limited programmable
Wash	Contact	240VAC, 0.5A Max.
	Time	ON: 0～9999 sec. / OFF: 0.0～999.9 hours
Voltage output		DC±12V, 1W Max.
Certification		IP 65 (NEMA 4X)
Power supply		100V~240VAC±10%，50/60Hz
Installation		Wall or Pipe or Panel mounting
Dimensions		144 mm × 144 mm × 115 mm (H×W×D)
Cut off dimensions		138 mm × 138 mm (H×W)
Weight		0.8Kg

Note: The specifications are subject to change without notice.

2. Assembly and installation

2.1 Transmitter installation: This controller can be installed through panel mounting, wall mounting and pipe mounting.

Installation of panel mounting: First, prepare a square hole of 138 x 138mm on the panel box, and then insert the controller directly into the panel box. Insert the accessorial mounting bracket from the rear, and make it be fixed in to pickup groove.

2.2 Illustration of panel mounting:

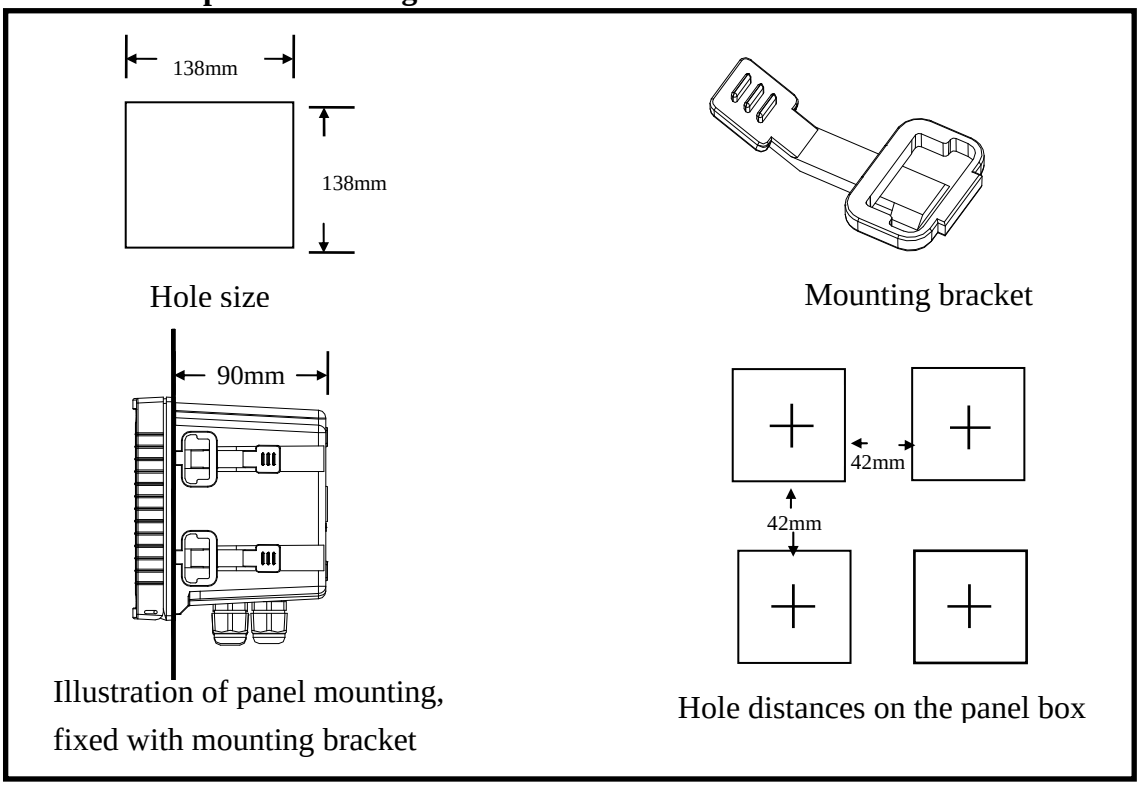

2.3 Illustration of wall mounting and pipe mounting

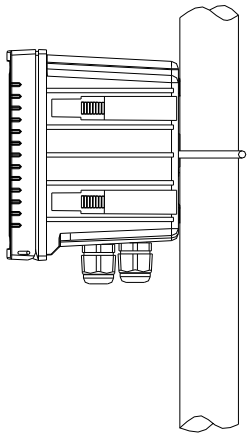

Installation of pipe mounting
Fixed with U-shaped pipe clip

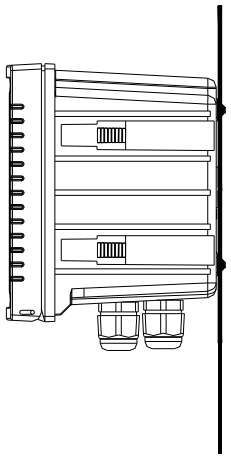

Installation of wall mounting
Fixed with 4 x M5 screws

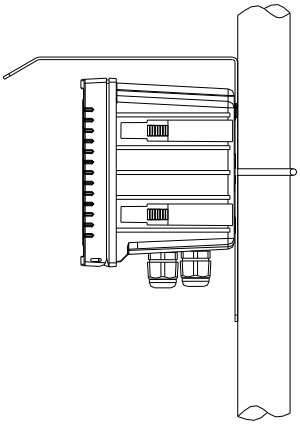

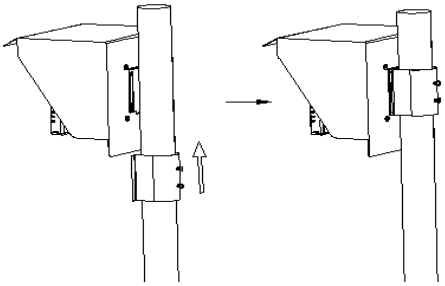

Sun Shield (Pipe mounting)
Order No.: 8-35 and 8-35-1

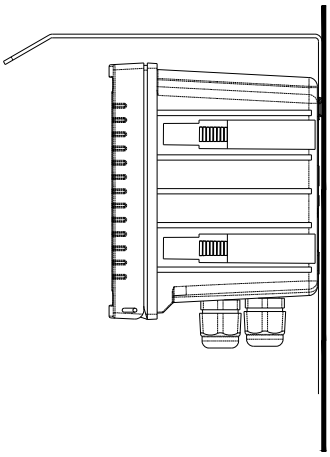

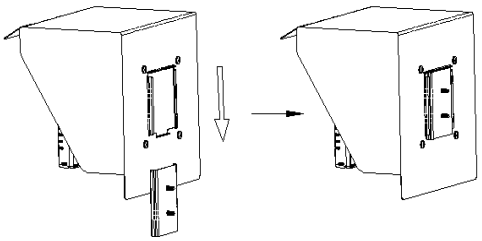

Sun Shield (Wall mounting)
Order No.: 8-35 and 8-35-2

3. Overview of ion transmitter IT-8100-RS

3.1 Illustration of rear panel:

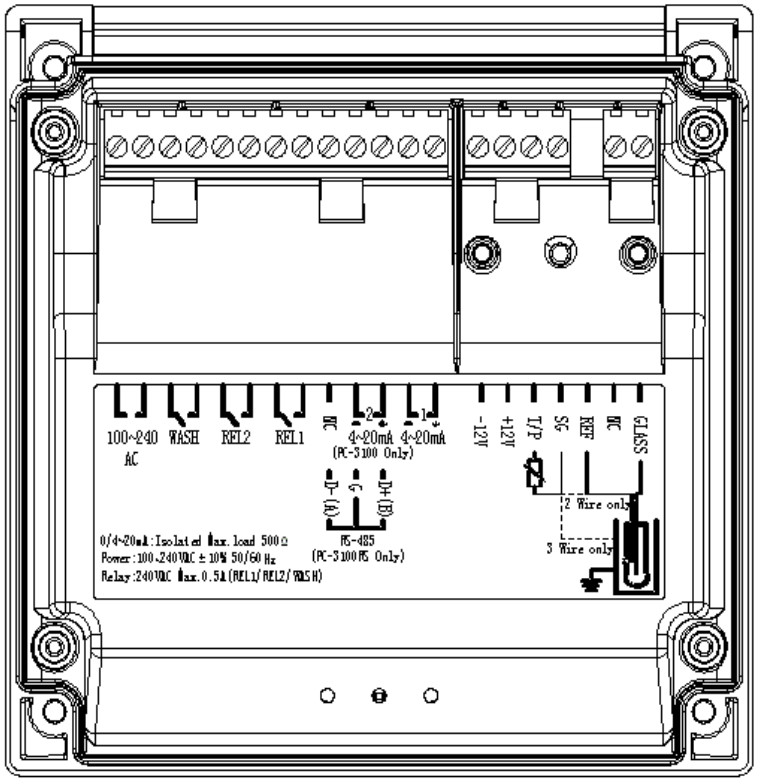

3.2 Illustration of terminal function:

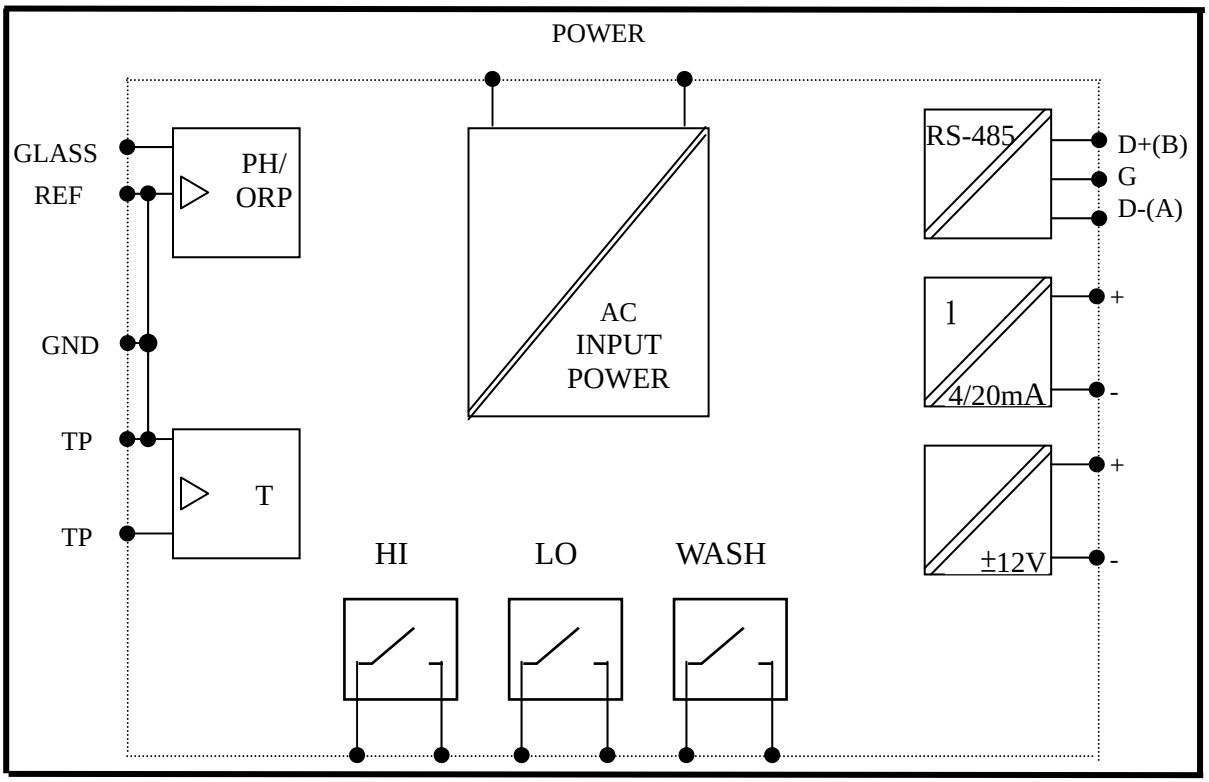

3.3 Description of terminal function

1-2	100~240AC :	Power supply terminal
3-4	WASH:	External wash relay terminal
5-6	REL2	L0, External relay terminal low control
7-8	REL1:	HI, External relay terminal high control
9	D-(A):	RS-485 output terminal D-(A)
10	G:	RS-485 output terminal GND
11	D+(B) :	RS-485 output terminal D+(B)
12	(1) 4~20mA- :	Master measure current output terminal -, for external recorder or PLC control
13	(1) 4~20mA +:	Master measure current output terminal +, for external recorder or PLC control
14-15	DC±12V:	Output terminal of direct current voltage ±12V **(PH-300T only)**
16	T/P:	Connect the other end of temperature probe
17	SG:	The terminal connecting temperature probe, or used as ±12V ground potential. **In two-wire distributing system, there should be a short circuit between this terminal and REF (a short circuit slice is attached when going out the factory)**
18	REF:	Coaxial shield connecting ISE/ORP electrode signal wire
19	NC:	Non-contact
20	GLASS:	Coaxial inner connecting ISE/ORP electrode signal wire

3.4 Typical wirings:

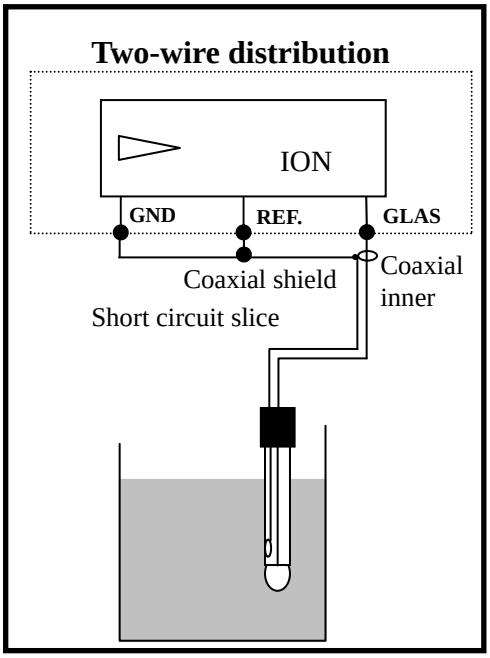

3.5 Illustration of electrical connection:

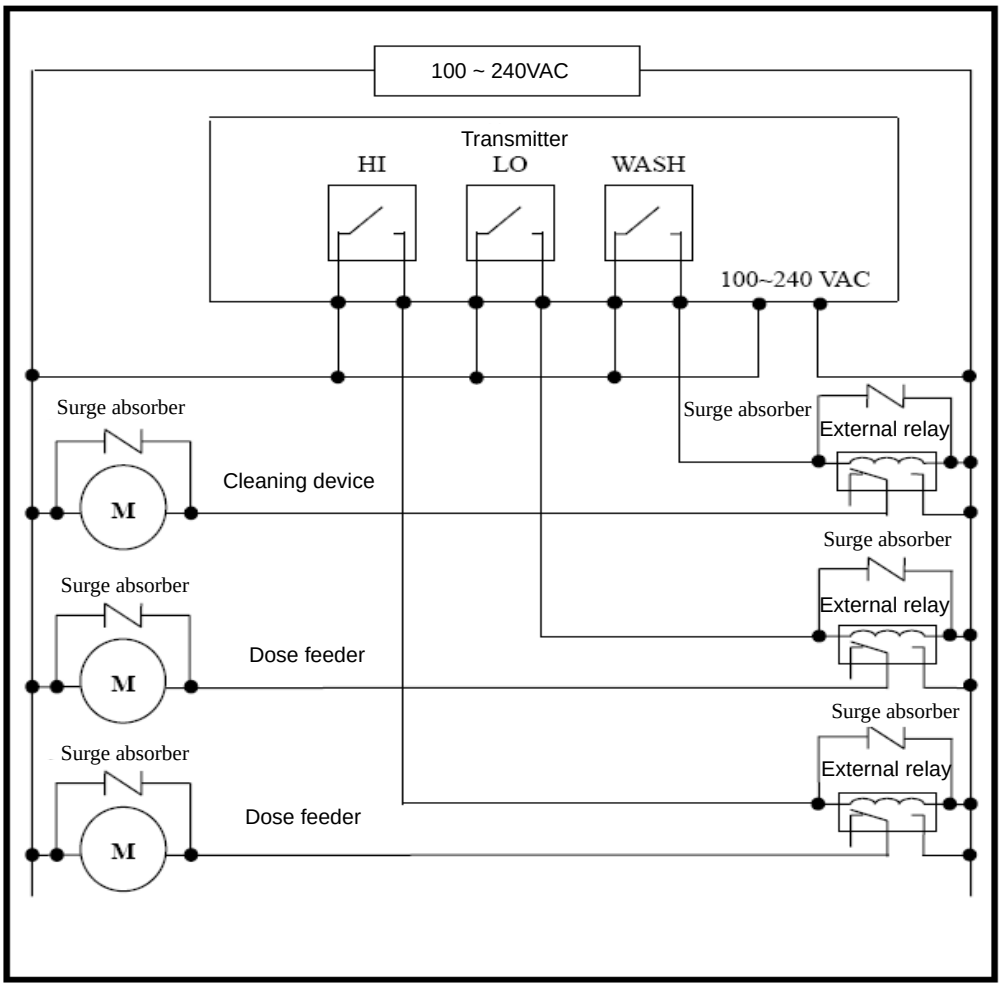

4. Configuration:

4.1 Illustration of front panel:

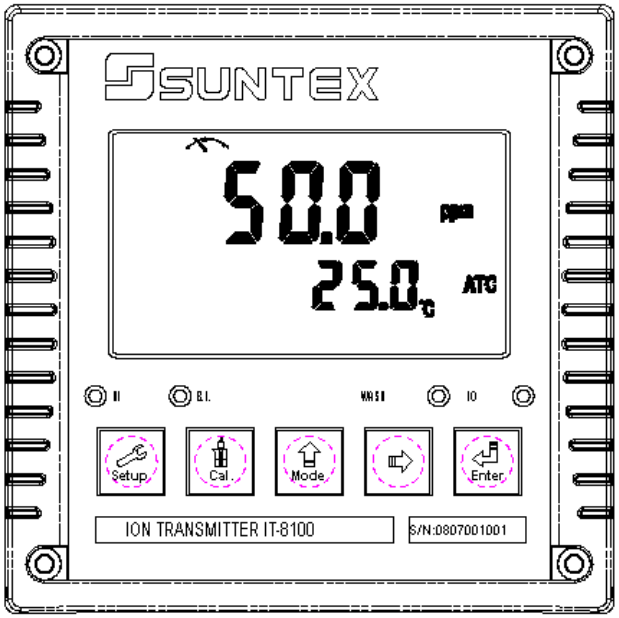

4.2 Keypad:

In order to prevent inappropriate operation by others, before the parameter setting and calibration, the operation applies multi-keys, and coding protection if necessary. Description of the key functions is in the following:

In the parameter set-up mode, pressing this key allows you exit parameter set-up mode and back to Measurement mode.

In the Calibration mode, pressing this key allows you exit Calibration mode and back to Measurement mode.

In the parameter set-up mode and Calibration mode, pressing this key to increase the value or to scroll to other function.

In the parameter set-up mode and Calibration mode, pressing this key to decrease the value or to scroll to other function.

Key for confirmation; pressing this key is essential when modifying data value or selecting the parameter setting items in the window.

: In the Measurement mode, pressing these two keys simultaneously allows you enter Calibration mode.

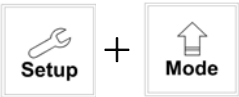

: In the Measurement mode, pressing these two keys simultaneously allows you enter parameter set-up mode.

4.3 LED indicators:

WASH: Washing device operation indicator lamp; when the washing device is started up, the Alarm indicator will light.

HI : Controlling operation indicator lamp; when the high setting point is reached, the REL1 indicator will light.

LO : Controlling operation indicator lamp; when the low setting point is started up, the REL2 indicator will light.

B.L. : Light sensor; in the automatic display backlit mode, the lamp will light or go out as the change of environmental brightness.

4.4 Display:

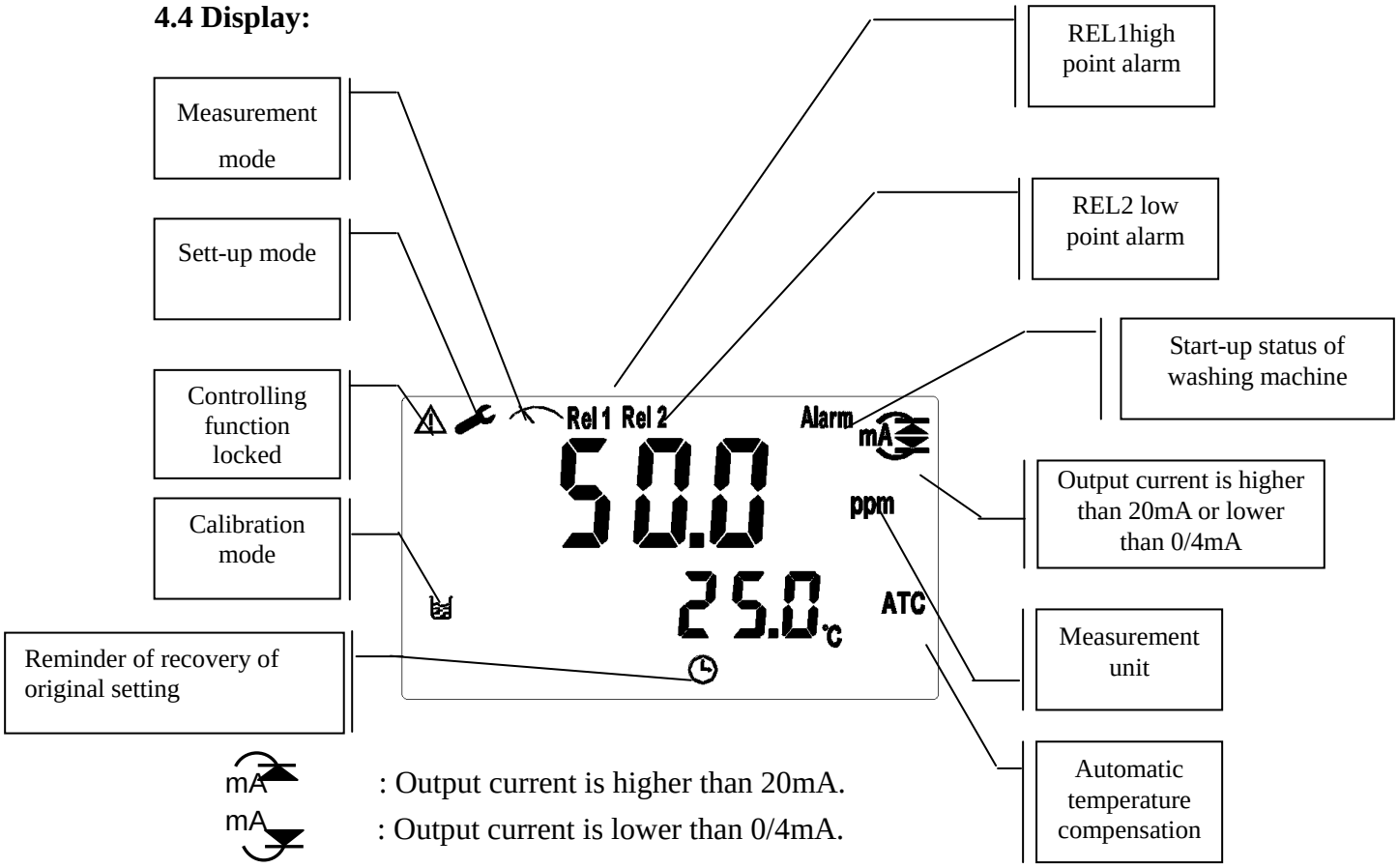

mA : Output current is higher than 20mA.

mA : Output current is lower than 0/4mA.

5. Operation

5.1 Measurement mode:

After all electrical connections are finished and tested, connect the instrument to the power supply and turn it on. The transmitter will automatically entering measurement mode with the factory default settings or the last settings from user.

5.2 Set-up mode:

Please refer to the set-up instructions in Chapter 6, and press Setup to back to measurement mode.

5.3 Calibration mode:

Please refer to the calibration instruction in chapter 7, and press Cal. to back to measurement mode.

5.4 Factory default value

5.4.1 System setting default value

Measurement mode: ppm
Measurement range: Auto
High point alarm: AUTO, SP1= 100ppm, db1= 0.10ppm
Low point alarm: AUTO, SP2 =10ppm, db2= 0.10ppm
Wash time: ON =0000 s., OFF =000.0 H, db= 0000 s.
Current output: 4~20 mA, 0.00~1000ppm
Signal average time(Digital filter): 30sec
Display backlit: OFF
Code set-up：OFF
Date/Time：2012/1/1, 0 hr/0 min./0 sec.
MODBUS set-up: RTU, Even, baud speed= 19200, ID= 01

5.4.2 Calibration default value

OS value: 280mV
Slope value: -59.0mV
Calibration mode: 2 points or 3 points calibration: CC1
Offset calibration: CA1

5.5 Time and date mode

In the measurement mode, press the key Enter to check the year, date, and time. You can shift among them sequentially by pressing the key Enter or enter the next page by waiting for 5 seconds. After the checkup, it will back to measurement mode automatically.

6. Settings

Block diagram of settings:

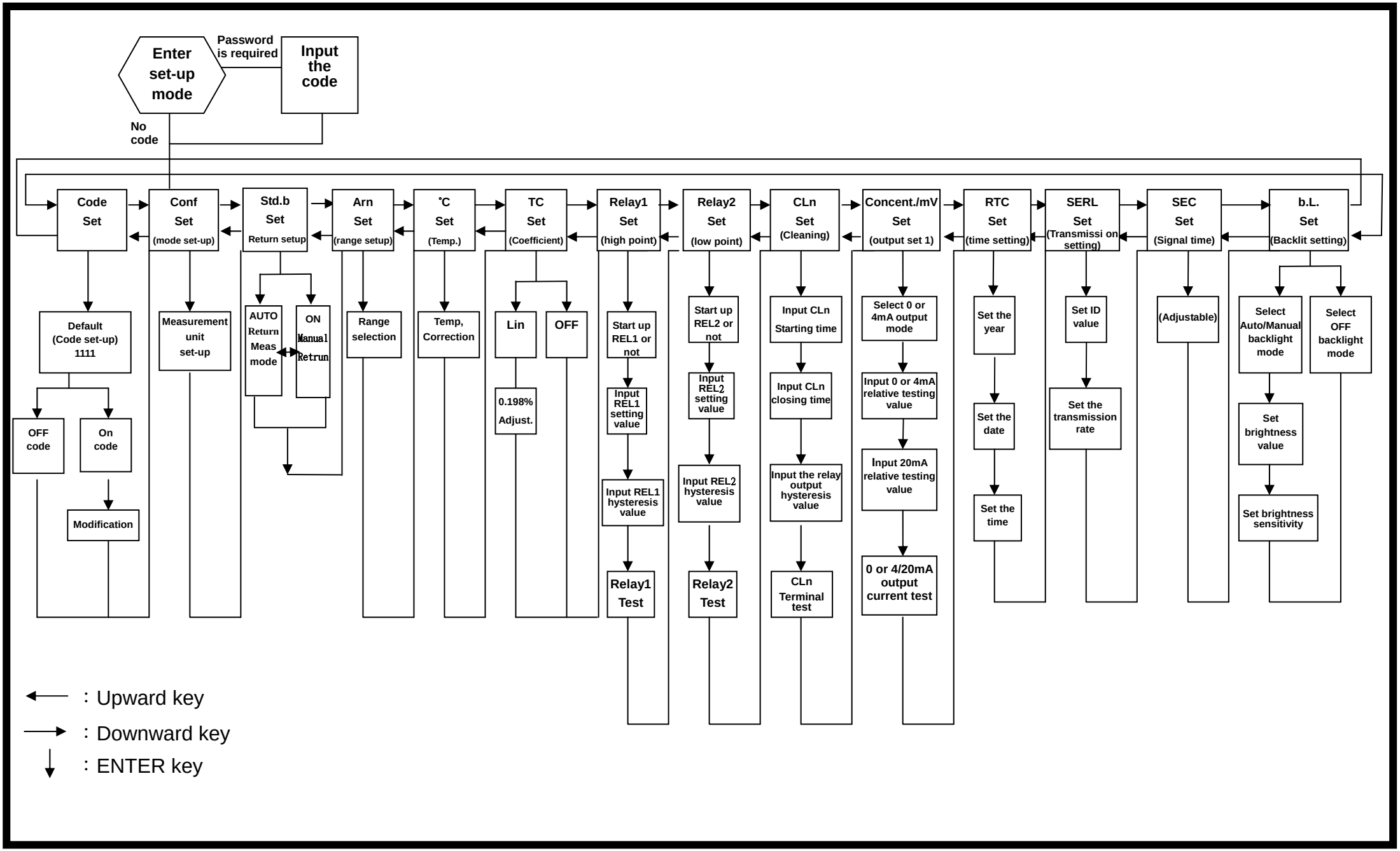

6.1 Entry of set-up mode

In the measurement mode, pressing the two keys Setup + Mode simultaneously allows you enter the parameter set-up mode. You can back to the measurement mode at any time by pressing the key Setup . The original code is 1111.

6.2 Security code of settings:

In the set-up mode, you can set up the code by pressing the key Mode , and confirm by pressing the key Enter .

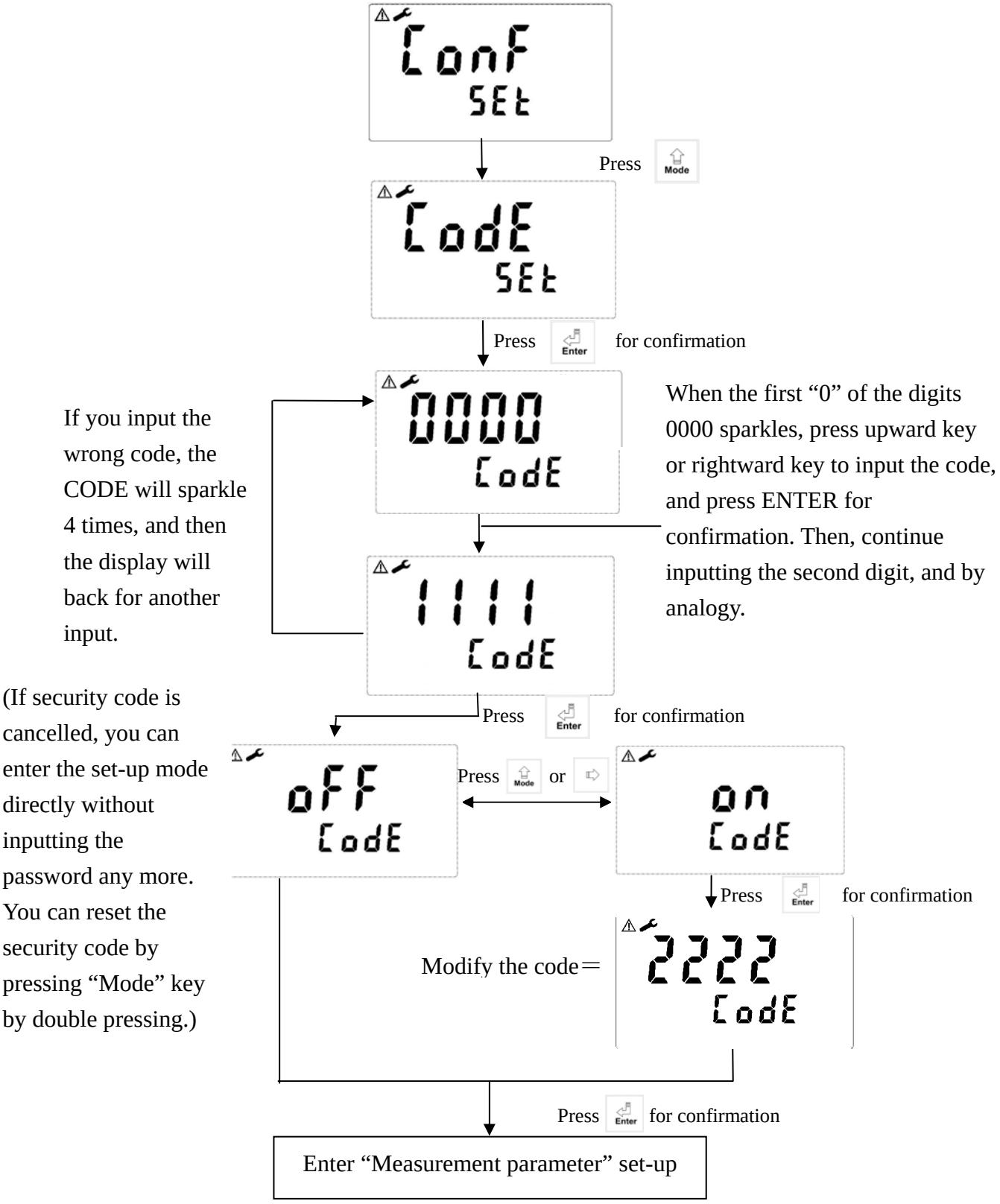

6.3 Ion type set-up

Enter ion type set-up.

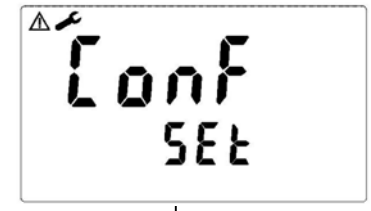

Press Enter to confirm it

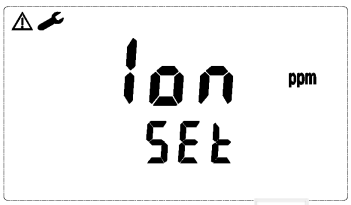

Press Mode or to select measuring unit: ppm or mg/l or mV

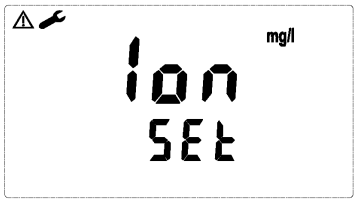

Press Mode or to select measuring unit: ppm or mg/l or mV

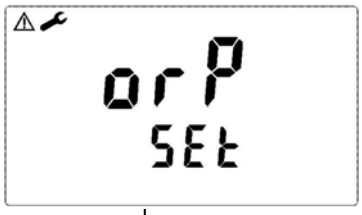

Press Enter to confirm it

Enter "Stand by" set-up

6.4 Stand by

To select stand by function for manual operation of going back to measurement mode or to select auto return to go back to measurement mode.

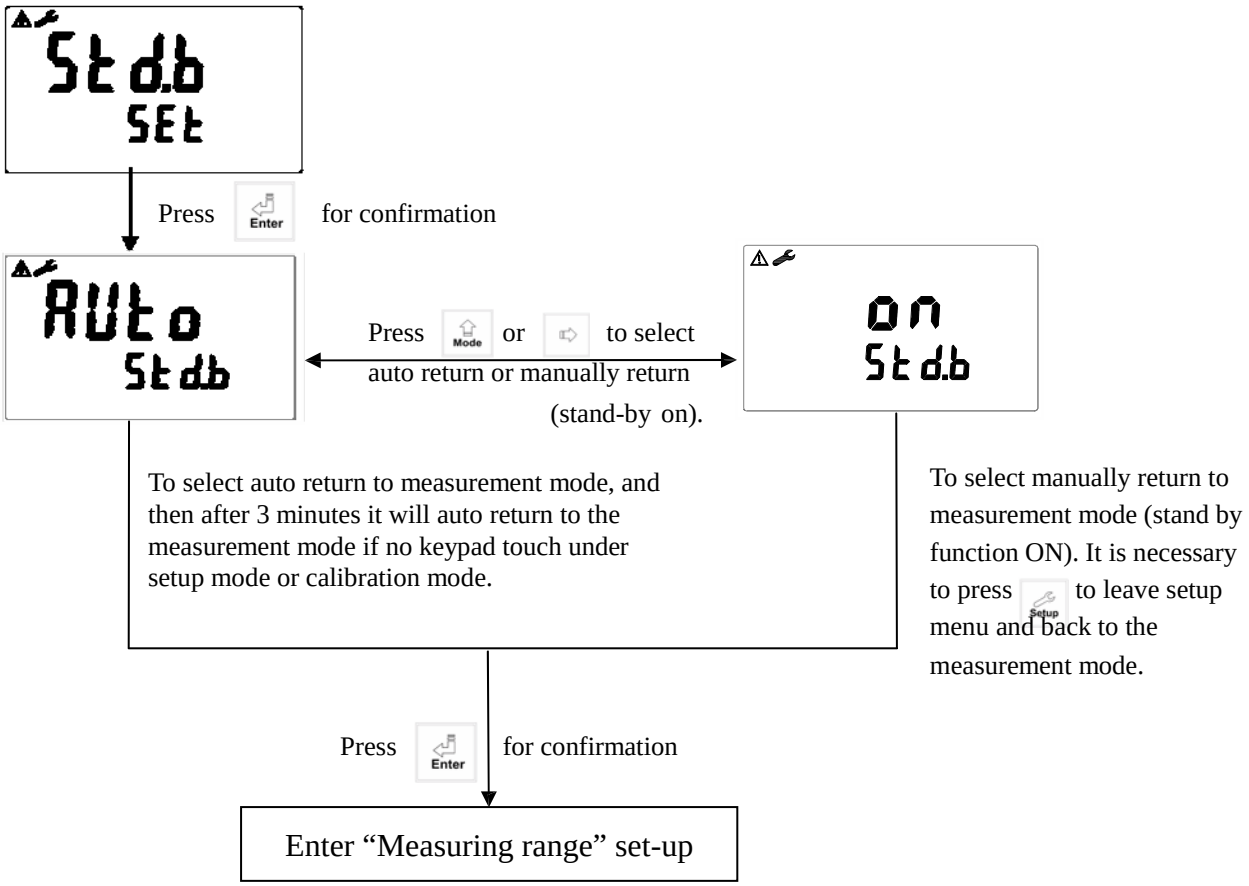

6.5 Measuring range set-up

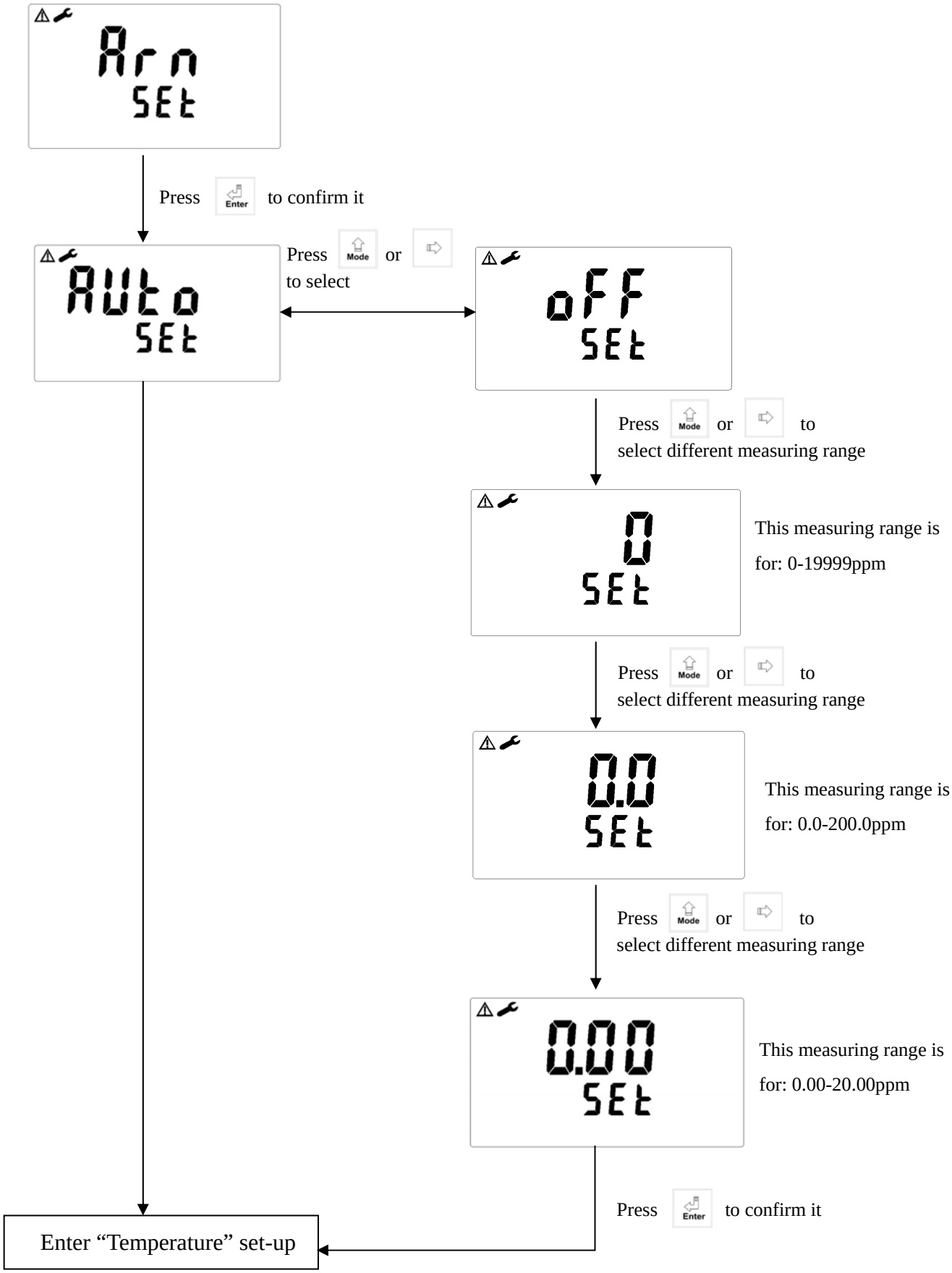

6.6 Temperature set-up

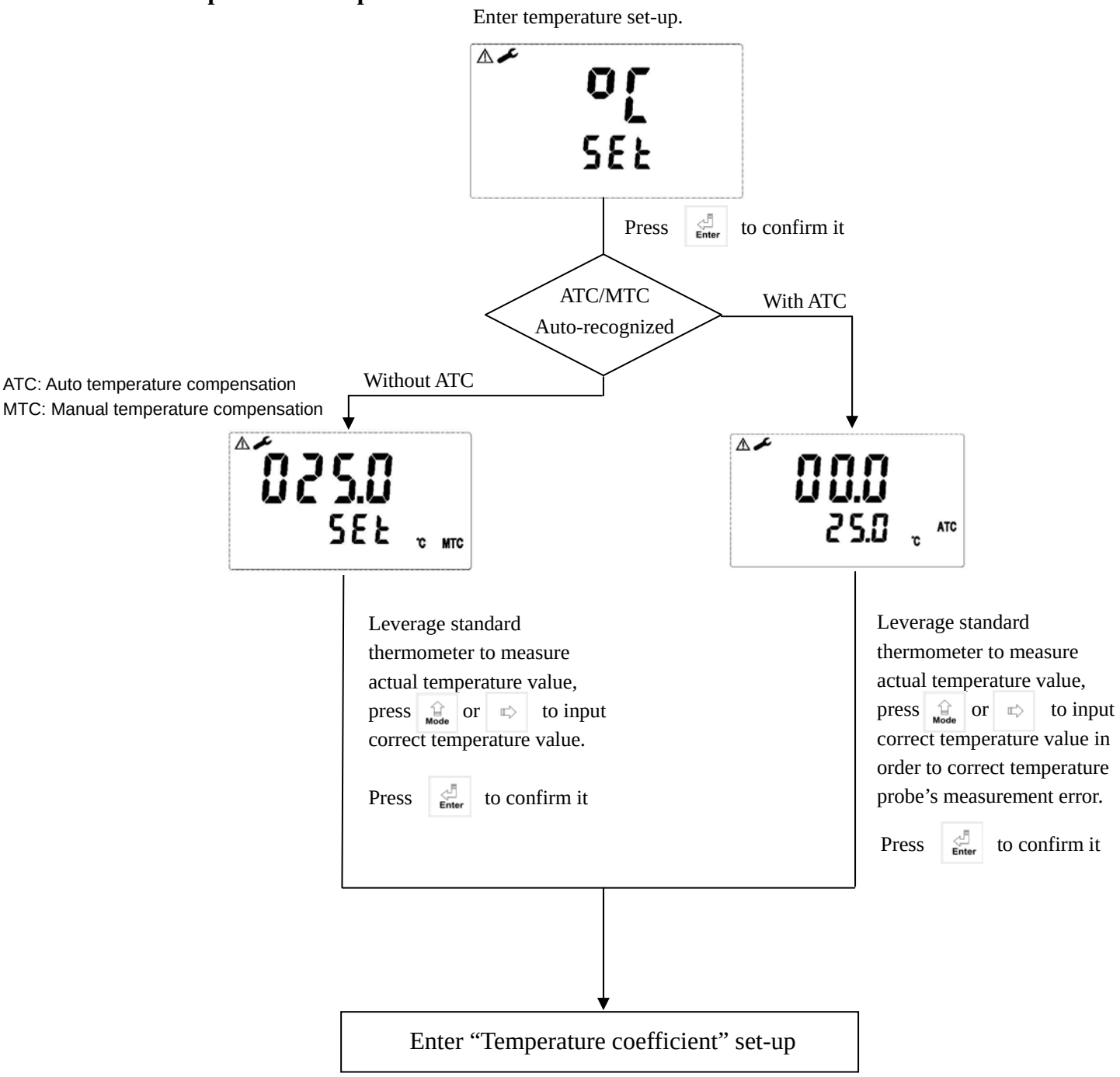

6.7 Temperature compensation coefficient set-up

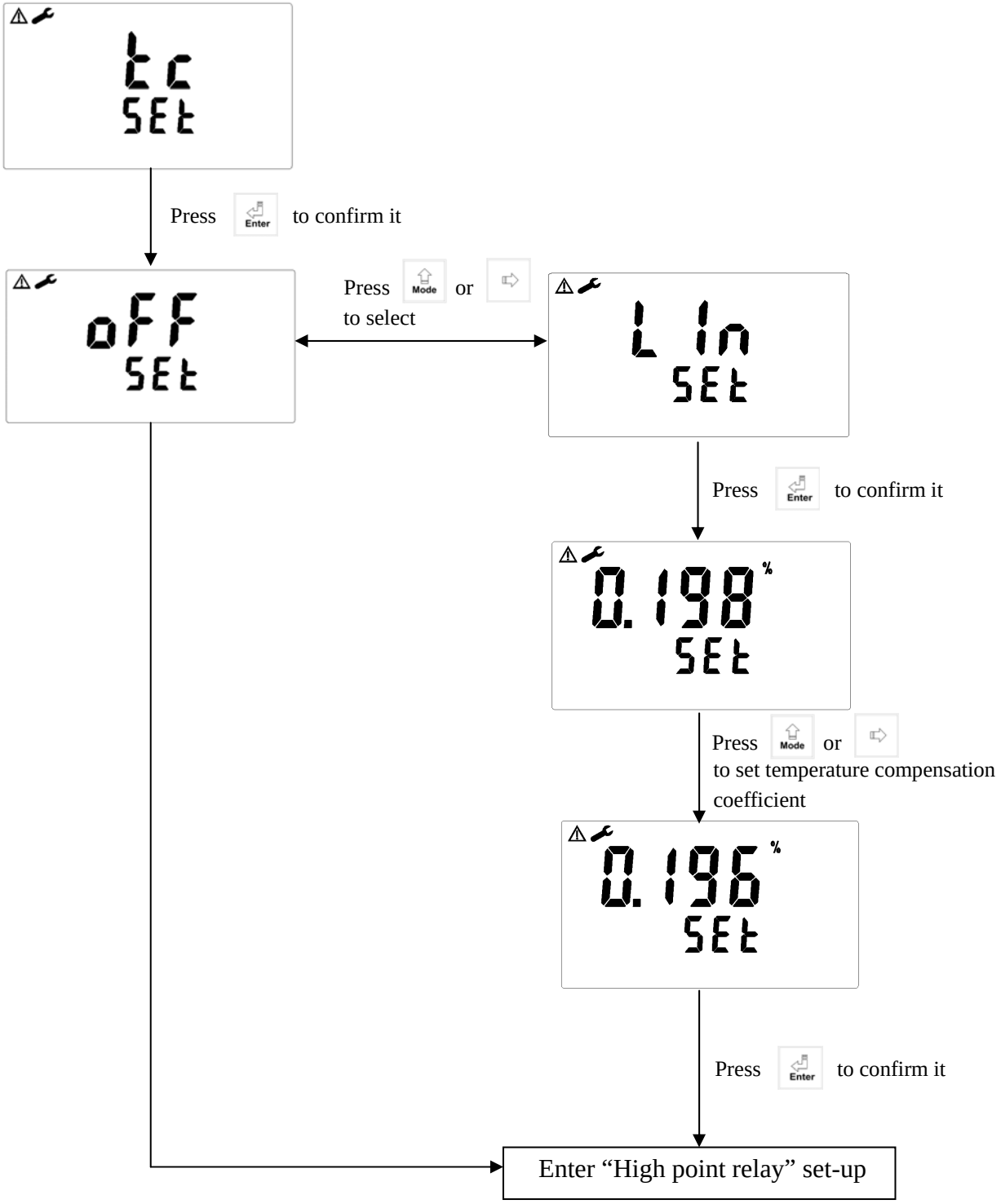

6.8 Hi point

Set the TH (THRESHOLD) and DB (DEADBAND) of Hi (REL1).The range for TH is 0.00~19999ppm/-1999.9~1999.9mv; while the range for DB is 0.00~10000ppm /0~300.0mV.

Note: When measuring range setup is set as "AUTO", the adjustment of the corresponding value is to adjust every digit and then to adjust the position of decimal. For example, if you need to set the value 10.00, you may set each digit to let it shows"1000", and then move the decimal to the proper position to make it shows as "10.00". When the sign ⚠ twinkles, it means that the fifth digit can be set.

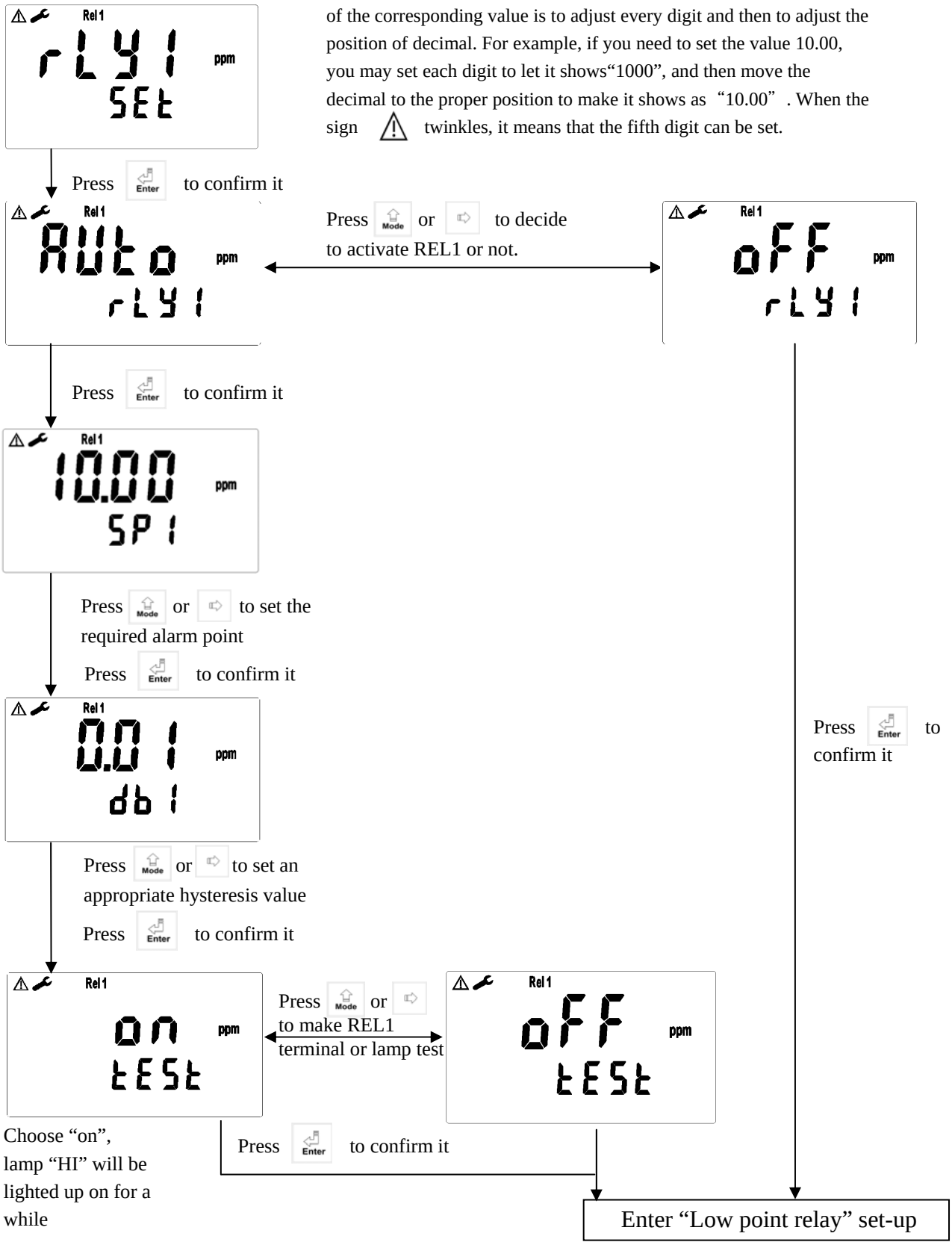

6.9 Lo point

Set the TH (THRESHOLD) and DB (DEADBAND) of Lo(REL2).

The range for TH is 0.00~19999ppm / -1999.9~1999.9mv; while the range for DB is 0.00~10000ppm / 0~300.0mV.

Note: When measuring range setup is set as "AUTO", the adjustment of the corresponding value is to adjust every digit and then to adjust the position of decimal. For example, if you need to set the value 10.00, you may set each digit to let it shows"1000", and then move the decimal to the proper position to make it shows as "10.00". When the sign ⚠ twinkles, it means that the fifth digit can be set.

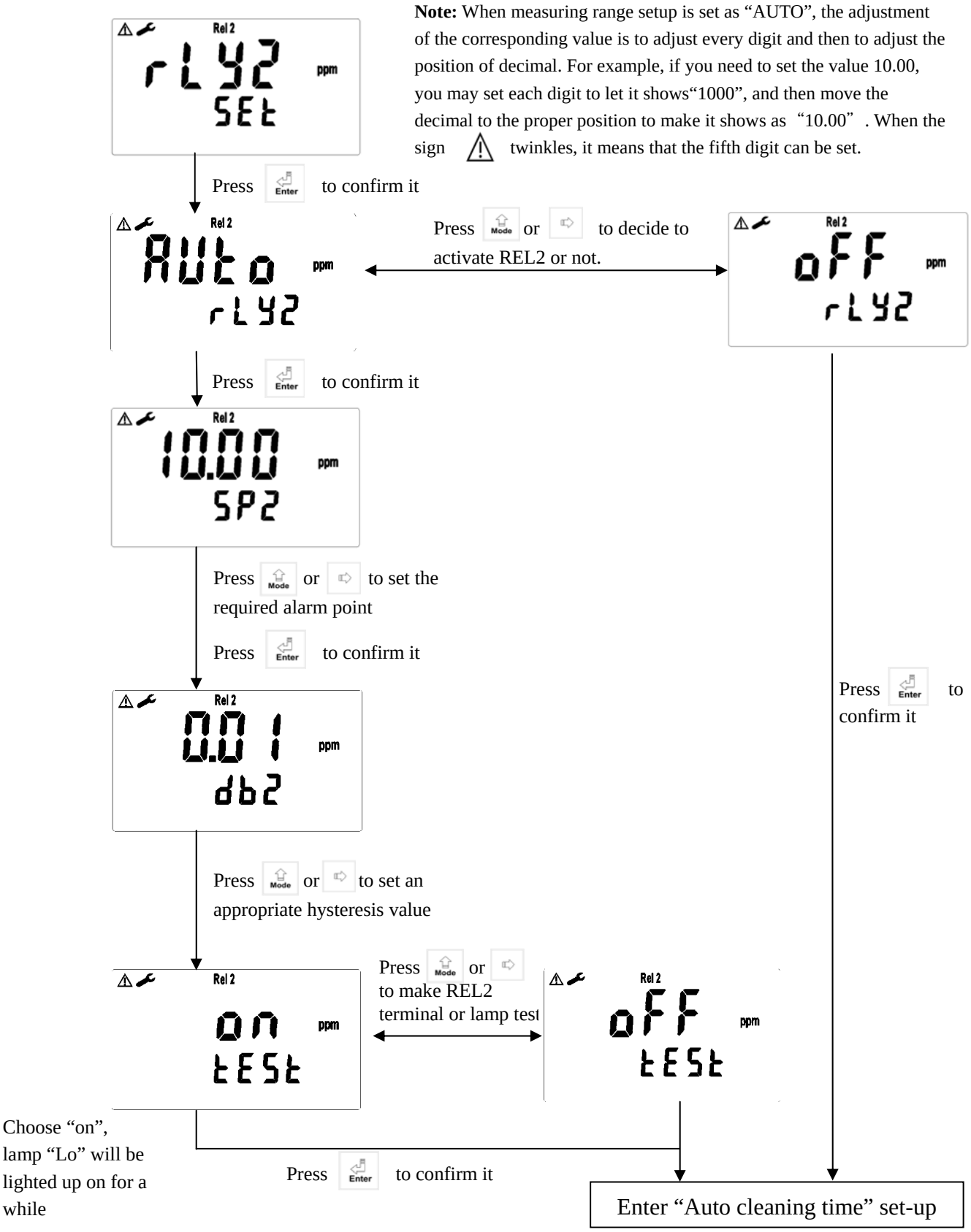

6.10 Wash time

Set the automatic starting time and turn-off time of the washing function. If any value is set to be 0, the instrument will automatically stop this function.

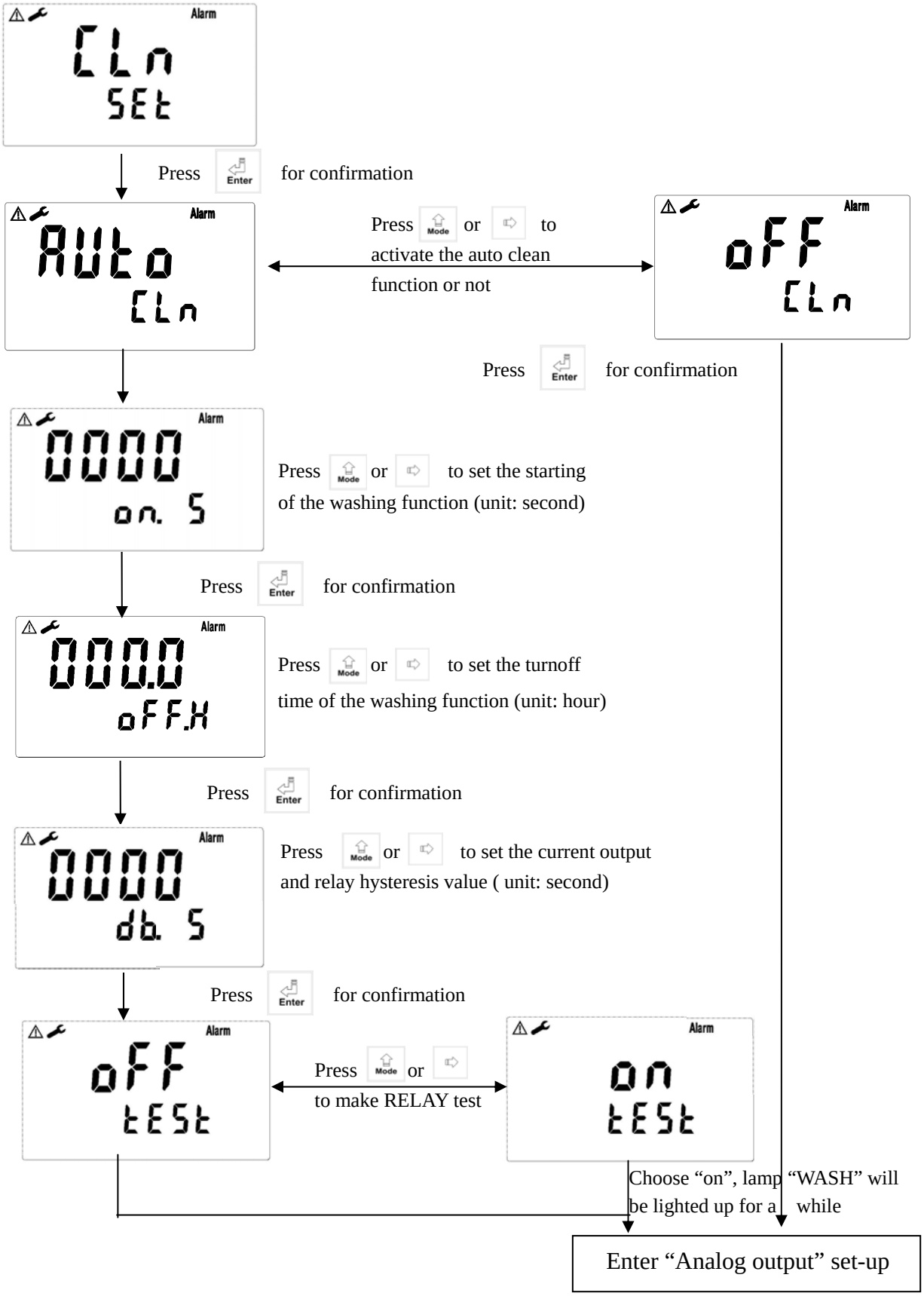

6.11 Analog output (corresponding to concentration/ORP)

You can adjust the relative range of the Ion/ORP measurement with the output current according to actual situation in order to improve the resolution of current output.

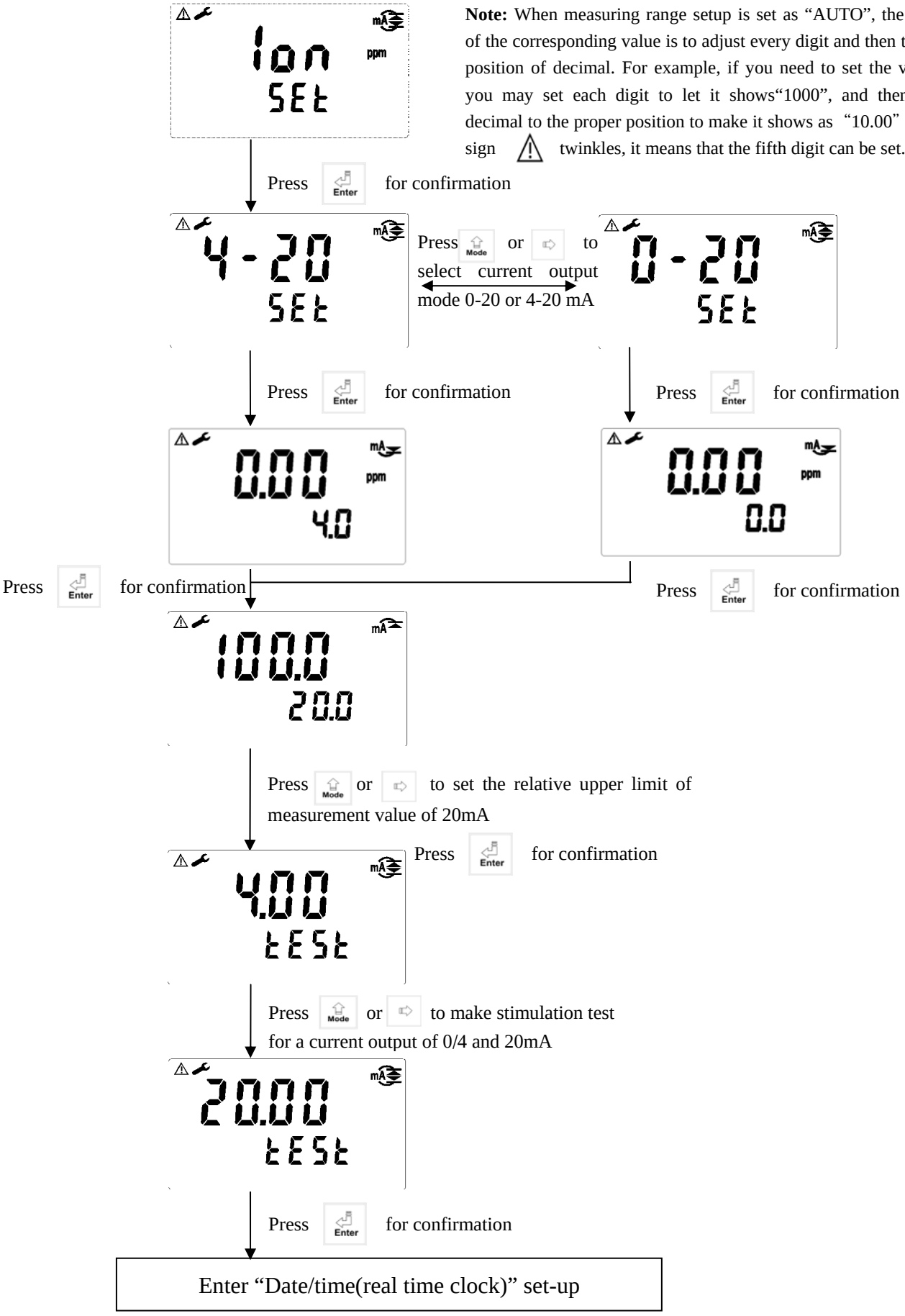

Note: When measuring range setup is set as “AUTO”, the adjustment of the corresponding value is to adjust every digit and then to adjust the position of decimal. For example, if you need to set the value 10.00, you may set each digit to let it shows“1000”, and then move the decimal to the proper position to make it shows as “10.00”. When the sign ⚠ twinkles, it means that the fifth digit can be set.

6.12 Date and Time

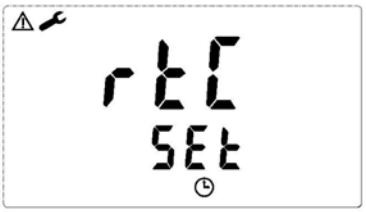

Press Enter for confirmation

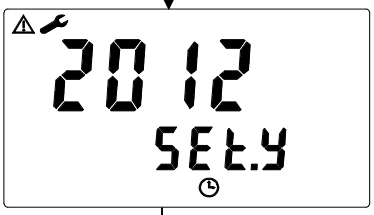

Press Mode or ⇨ to set the year

Press Enter for confirmation

Press Mode to set month and day.

Press key ⇨ for moving to next digit's setting.

Press Enter for confirmation

Use Mode to set the time.

⇨ The key is for digital

Press Enter for confirmation

Enter "RS-485" set-up

6.13 RS-485 set-up

Uses may according to your need to freely set the ID and transmissioin speed of the serial output.

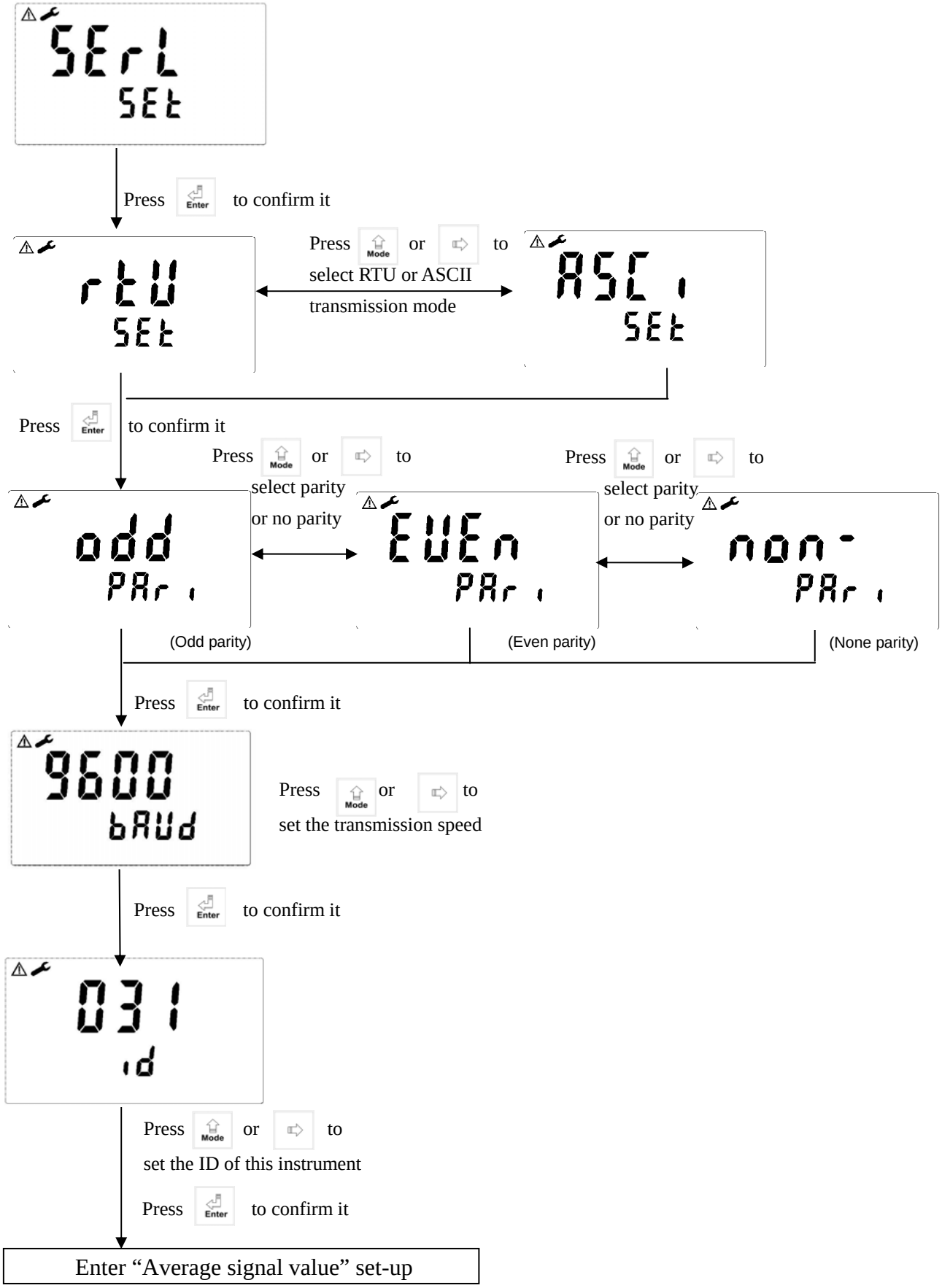

6.14 Average signal value set-up

You may set which number of measurement value to make an averaged value to increase the stability of display value.

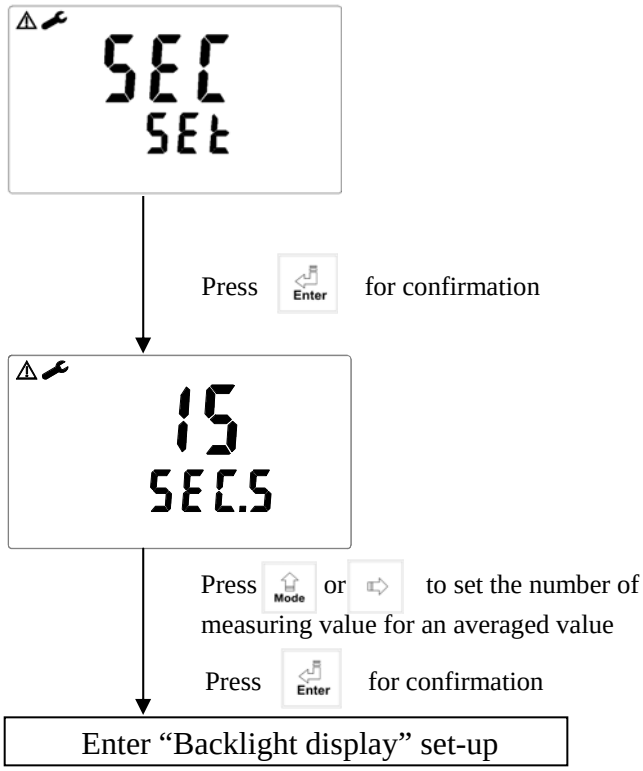

6.15 Backlit LCD

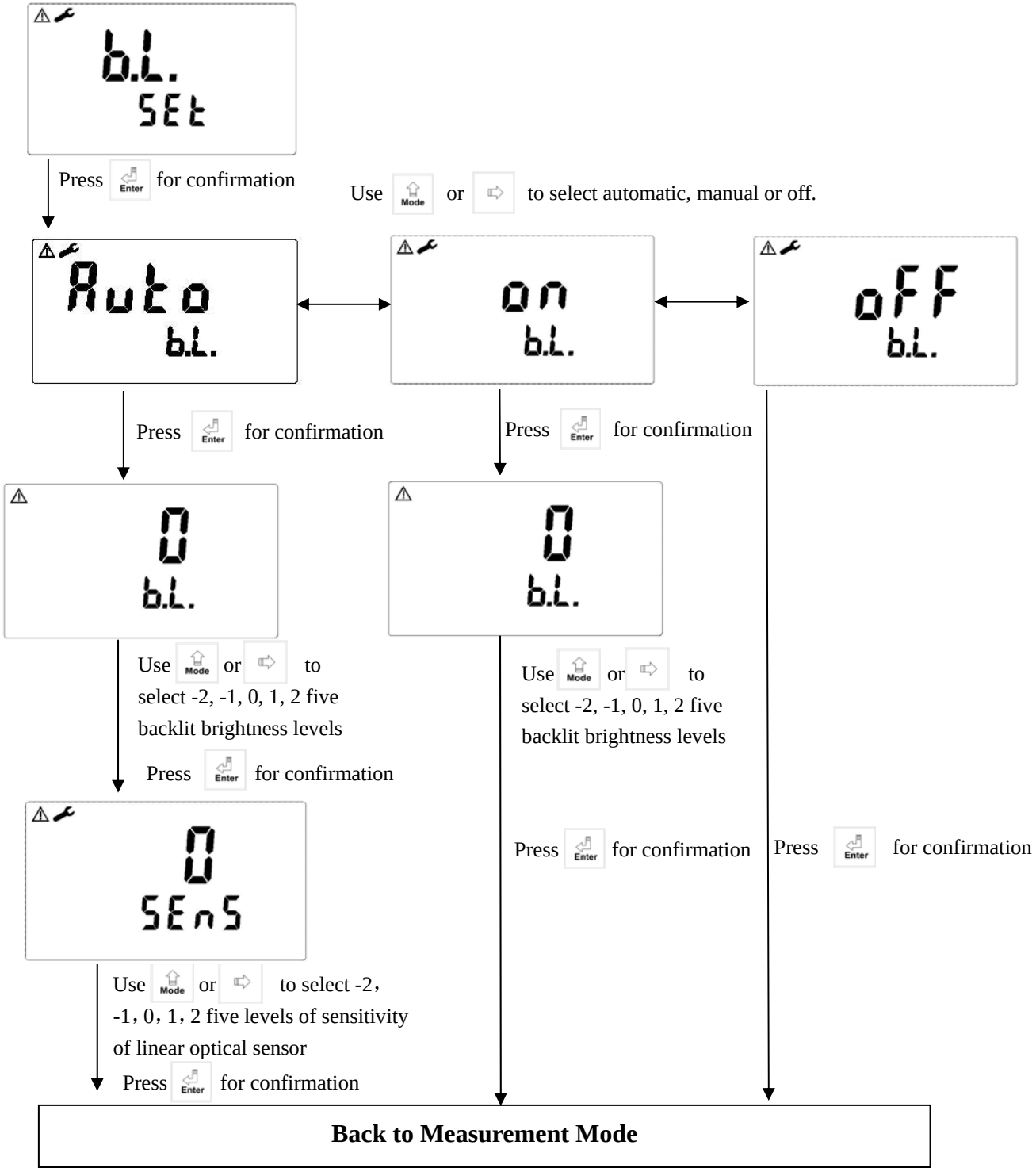

Block diagram of Calibration

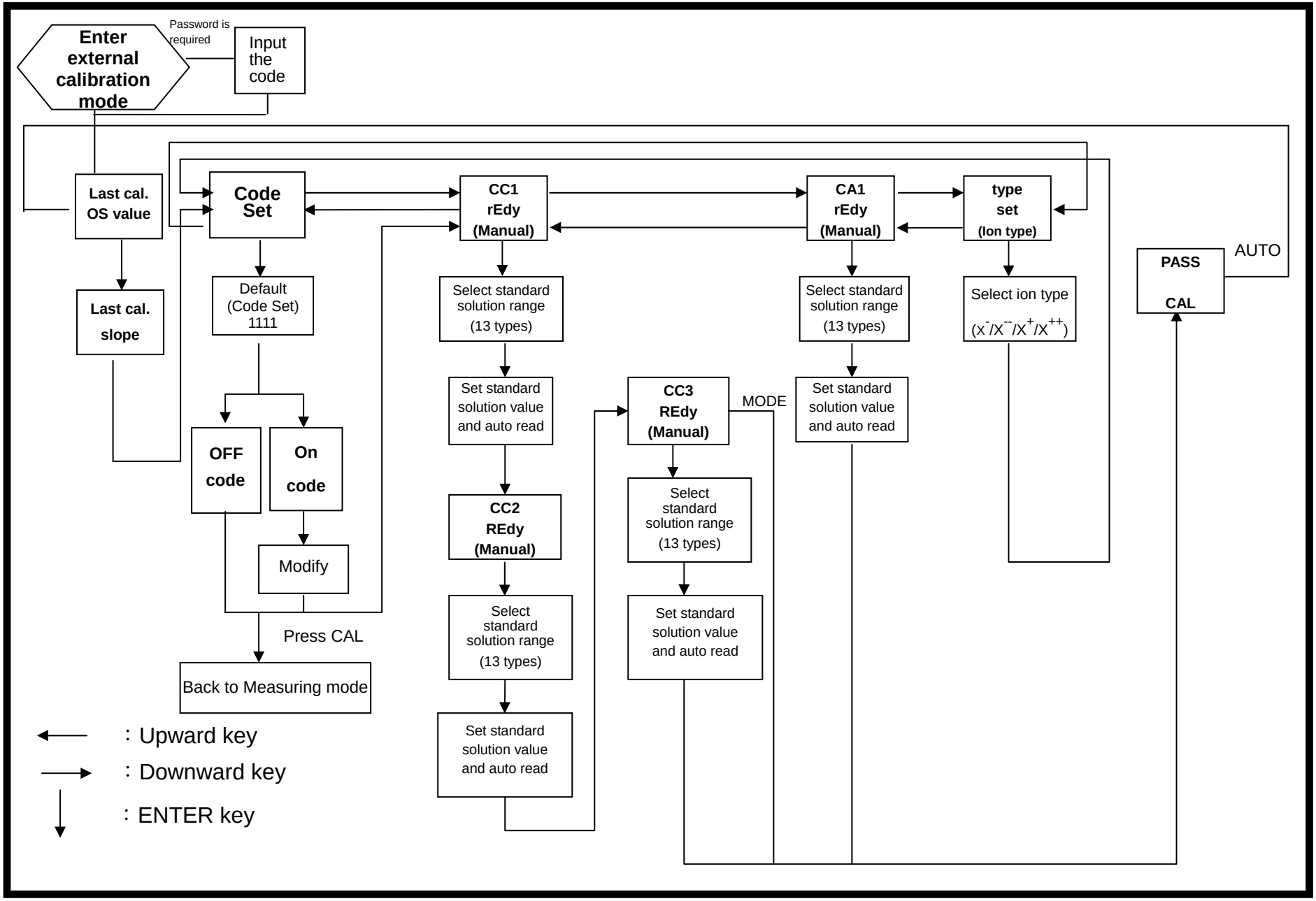

7.1 Deployment of standard solution

(1) 50ppm standard solution

Take 5ml of standard solution (F^- 1000ppm), and take 1ml TISAB (Strengthening solution), and take pure water until the volume of all the solutions is 100ml. That the solution is “50 ppm F^- standard solution.”

(2) 5ppm standard solution

Take 0.5ml of standard solution (F^- 1000ppm), and take 1ml TISAB (Strengthening solution), and take pure water until the volume of all the solutions is 100ml. That the solution is “5 ppm F^- standard solution.”

****After calibration, the deployed standard solution cannot be reserved and reused for next time calibration. Normally, the calibration duration is at least once per month. ****

7.2 Security code of calibration:

7.2.1 Code authorization: There is a two level password protection design. The code authorization of parameter setting is prior to the code authorization of calibration setting. Therefore, you can unlock the calibration with your “parameter set-up” password, or directly with your calibration set-up password.

7.2.2 Code set: In the measurement mode, press Cal. + Mode simultaneously to access the OS value (by pressing Enter) and slope value (by pressing Enter) of previous calibration, and then use Mode or ⇨ to enter the code set page.

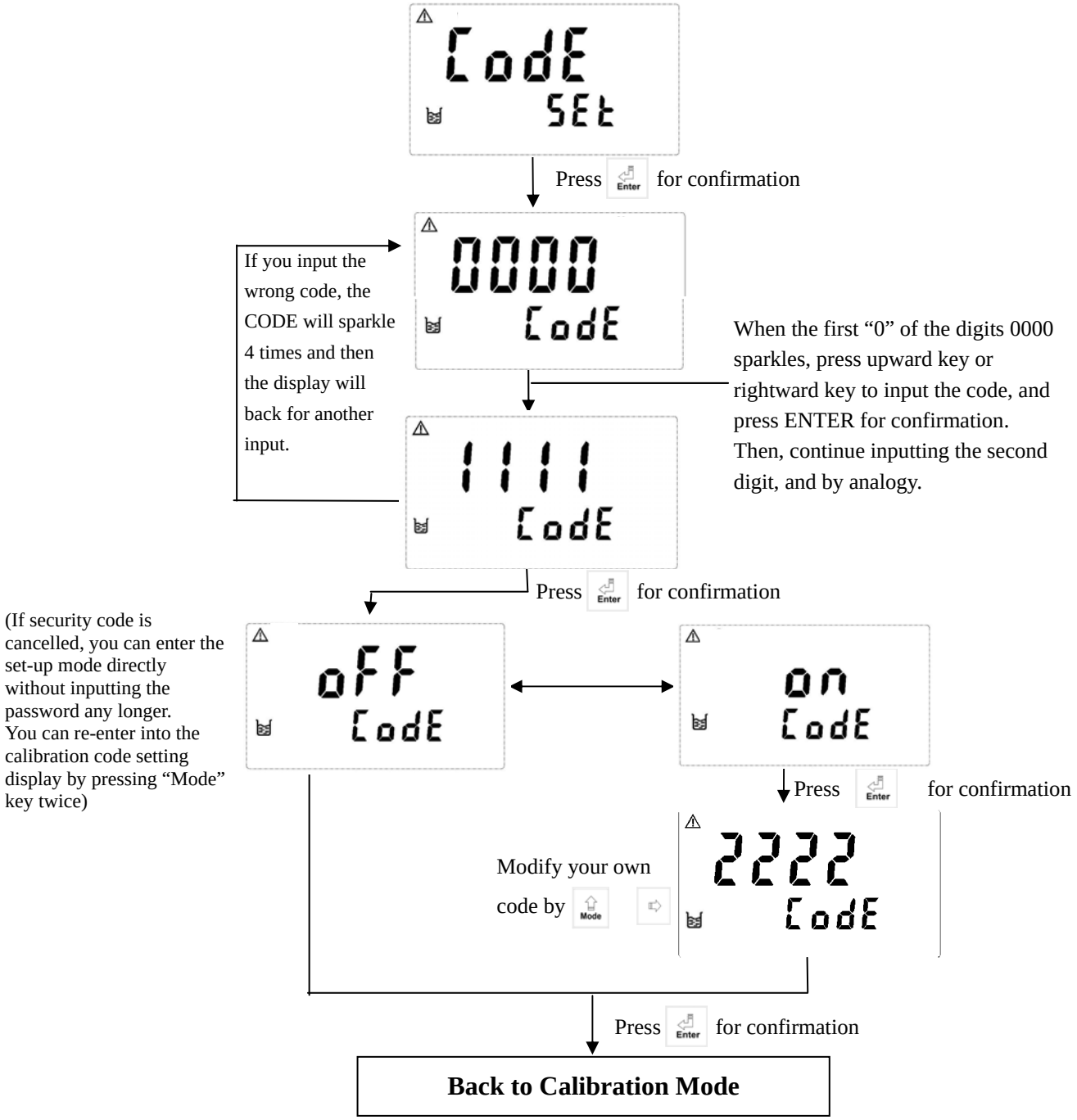

7.3 Calibration mode

7.3.1 Press Cal. + Mode simultaneously to enter to calibration mode. Press Cal. any time to go back to measurement mode.

7.2.2 Enter calibration mode, the display shows OS1 value(zero-point potential) of last calibration. Press Enter to enter next page.

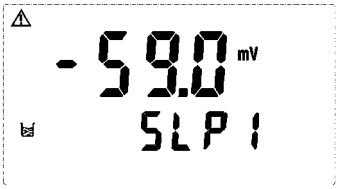

7.3.3 The display shows SLP1 (slope value)of last calibration. Press Enter to enter calibration menu.

7.3.4 Press Mode or ⇨ to select CC1 , CA1 or type Set-up. Press Enter to confirm it.

NOTE: 1. Both ppm and mg/l are concentration unit, and their calibration procedures are the same.

2. The transmitter provide two kinds of calibration mode: CC and CA. Both calibration modes have 13 measurement range to select. (1.00, 2.00, 5.00, 10.00, 20.00, 50.00, 100.0, 200.0, 500, 1000, 2000, 5000, 10000)

3. In CC calibration mode, you may make two or three points calibration. Three points calibration must be done by order(form high to low point, or from low to high point)

4. After CC calibration, if you find that there is a difference between actual value and measurement value, you may make an offset calibration(CA) to correct the error. CA calibration is only for one-point calibration.

7.4 Ion type set-up

Valence of ion types are divided into X^{--} /X^{-} /X^{+} /X^{++} . When you measure ion in X^{-}or X^{+} (valence=1), for example “F^{-}“, please set the valence =1 in the ion type set-up. When you measure ion in X^{--}or X^{++}(valence=2), for example “Ca^{++}“, please set the valence =2 in the ion type set-up.

7.4.1 Enter ion type set-up, press Enter to enter next page.

Note: Slope limitation for ion valence =1: 40～70mV.
Slope limitation for ion valence =2: 20～35mV.

7.4.2 Base on your measured ion valence, press Mode or ⇨ to set valence number. Press Enter to confirm it.

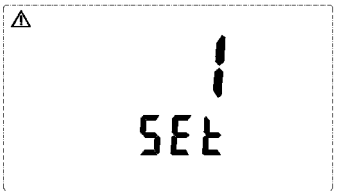

7.5 Concentration standard solution calibration—CC set-up

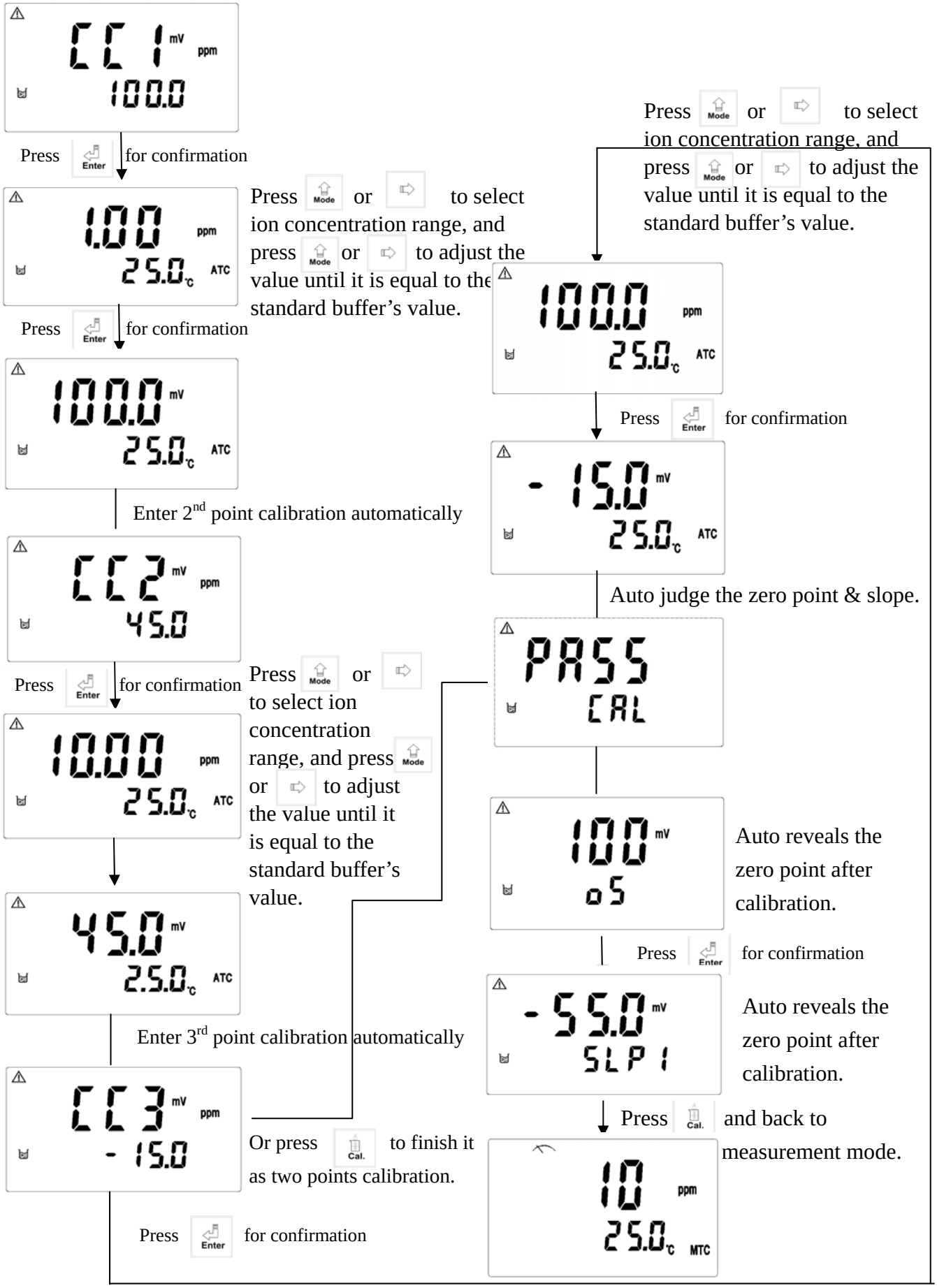

7.6 Offset calibration—CA

If there is difference between online measurement value and laboratory measurement value, you may leverage CA (Offset) calibration mode to correct difference value. However, before CA calibration, the CC calibration must be done in advance.

7.6.1 Enter CA1 calibration set-up, press Enter to start the procedure.

7.6.2 Enter concentration range selection, press Mode or ⇨ to select appropriate range. Press Enter to activate the procedure. When the value twinkles in the display, press Mode or ⇨ to adjust the value until it is the same with the value of standard solution. Then, press Enter to confirm it to finish the CA calibration and automatically back to measurement mode.

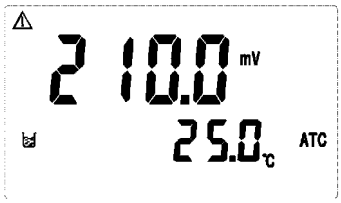

8. Modbus protocol and instructions

8.1 Communication connection

The RS-485 communication port of the transmitter features with electronic isolation protection, lightning protection, and to provide internal independent ground solution. It is allowed to use normal twisted-pair (segregation double-stranded twisted pair cable) cable connections. All devices are in contact with a double-stranded, and then all together, and another line will be connected with all the negative contacts, and the isolated shield wire must be connected to GND. When we talk about communication in the laboratory, the stand-alone master-slave communication is relatively simple. Hence, it is allowed to consider using the normal cable instead. However, there should be strictly in accordance with the requirements of industrial engineering construction. Wiring diagram is as follows:

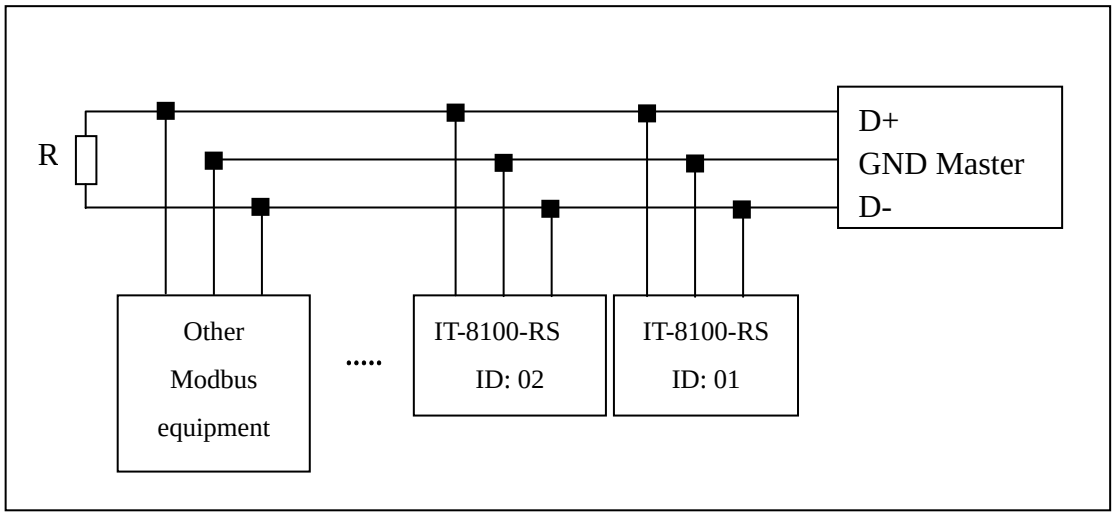

Note:

1. The RS-485 interface of IT-8100-RS transmitter has a protective earth terminal. When communicate with the RS-485, there should use with solution ground to eliminate risk of safety.
2. It is allowed to use a 120 ohm impedance matching resistors at terminal equipment in the transmission lines (D +, D-) ends across to effectively reduce or eliminate signal reflection.
3. Without repeaters, the RS-485 network can not exceed a maximum of 32 nodes. The maximum communication transmission distance of RS-485 is up to 1200 meters.
4. When communication, all the equipments of the network should be maintained in the same transfer mode, baud rate, parity consistent. And each of the device address can not be the same, so as not to conflict resulted in the normal network communications.
5. The Modbus command of the transmitter can only access 50 registers. If it exceeds the length, then it returns abnormal message.

8.2 MODBUS name and address table

Function Code：03H, 06, 10H Modbus response (setup parameter)

Logic address	Item	Number of Byte	Information type	Description of data transmission	Default value	Note
0001H	Equipment's ID	2	USHORT	1-247	1	
0002H	Transmitter model	6	USHORT	ASCII Code	IT8100	
0005H	Communication protocol	2	USHORT	0: RTU	0	
				1: ASCII		
0006H	Serial transmission speed (Baud rate)	2	USHORT	0: 2400	3	
				1: 4800		
				2: 9600		
				3: 19200		
0007H	Parity	2	USHORT	0: None	1	
				1: Even		
				2: Odd		
0008H	Real-time clock*	12	USHORT	Second	2011-01-01, 00:00:00	
0009H			USHORT	Minute		
000AH			USHORT	Hour		
000BH			USHORT	Day		
000CH			USHORT	Month		
000DH			USHORT	Year		
000EH	Code setting*	2	USHORT	Code setting	1111	
000FH	Temperature mode*	2	USHORT	0: MTC	0	
				1: PTC		
				-		
0010H	WASH relay*	2	USHORT	0: OFF	0	
			USHORT	1: AUTO		
0011H		2	USHORT	ON.S: 0-9999	0	Second
0012H		4	USHORT	OFF.H: 0-999.9	0	Hour
0014H		2	USHORT	DB.S: 0-9999	0	Second
0015H	Relay 1 *	2	USHORT	0: OFF	1	
				1: AUTO		
0016H		2	USHORT	Unused	0	
0017H		4	FLOAT	SP1	125.0%	Data affected by sign byte
0019H		4	FLOAT	DB1	10.0%	

001BH	Relay 2 *	2	USHORT	0: OFF 1: AUTO	1	
001CH		2	USHORT	Unused	1	
001DH		4	FLOAT	SP2	25.0%	Data affected by sign byte
001FH		4	FLOAT	DB2	1.0%	

0021H	Backlight Brightness *	2	USHORT	0: AUTO 1: ON 2: OFF	2	
0022H		2	SHORT	2: Highest bright	0	
			SHORT	1: high bright		
			SHORT	0: Standard		
			SHORT	-1: Low bright		
			SHORT	-2: Lowest bright		
0023H	Backlight Sensitivity*	2	SHORT	2: Highest Sensitivity	0	
			SHORT	1: High Sensitivity		
			SHORT	0: Standard		
			SHORT	-1: Low Sensitivity		
			SHORT	-2: Lowest Sensitivity		
0024H	Sample average of measurements (Digital Filter) *	2	USHORT	1-60	5	
0025H-0030H	Factory reserved					

Note : The actions without * sign only support for function code 03H. The actions with * sign support function code 03H, 06H, 10H. USHORT data range from 0 to 65535, SHORT data range from -32768 to 32767. FLOAT is a 4 data bits IEEE 754 format float. The data range follows is the same.

Function code: 03H Modbus response (measurement parameter)

Logic address	Item	**Number of Byte**	Information type	Description of data transmission	Default value	Note
0031H	Number of measurement channels	2	USHORT	IT-8100-RS only has one channel	1	
				ORP(mV) ppm mg/l		
0035H	Main measurement	4	FLOAT	Main measurement		Data affected by sign byte
0037H	Temperature measurement	4	FLOAT	Temperature measurement		
0039H-0050H	Factory reserved					

Function code: 01H,05H,0FH Modbus response (dispersion parameter)

Logic address	Item	BIT	Description	Default value	Note
0070H	LO Alarm	1	Contact on	0 (Contact off)	
0071H	Hi Alarm	1	Contact on	0 (Contact off)	
0072H	MA too high	1	Contact on	0 (Contact off)	
0073H	MA too low	1	Contact on	0 (Contact off)	
0074H	Exceed temp. range	1	Contact on	0 (Contact off)	
0075H	Exceed D.O. range	1	Contact on	0 (Contact off)	
0076H	RLY1 Action *	1	Contact on	0 (Contact off)	
0077H	RLY2 Action*	1	Contact on	0 (Contact off)	
0078H	WASH Action*	1	Contact on	0 (Contact off)	
0079H	Measurement status	1	Contact on	1(Contact on)	0: Hold 1: Measurement
0079H-0090H	Factory reserved				

Note: The actions without * sign only support for function code 01H.

The actions with * sign support function code 01H, 05H, 0FH.

Function code: 08H Correlated diagnostic function

Sub function code	Name of Counter	Note
0AH	Clear all the counters	Clear Counters and Diagnostic Register
0BH	Return Bus Message Count	The response data field returns the quantity of message that the slave has detected on the communications system since its last restart or last clear counters operation, or being powered-up. It counts whether the address comes from the remote equipment or not,.
0CH	Return Bus Communication Error Count	The response data field returns the quantity of CRC errors encountered by the slave since its last restart, clear counters operation, or power-up. It counts whether the address comes from the remote equipment or not,.
0DH	Return Bus Exception Error Count	The response data field returns the quantity of Modbus exception responses returned by the slave since its last restart, clear counters operation, or power-up. It only counts when the address comes from the remote equipment.
0EH	Return Slave Message Count	The response data field returns the quantity of messages addressed to the slave, or broadcast, that the slave has processed since its last restart, clear counters operation, or power-up. It only counts when the address comes from that remote equipment.
0FH	Return Slave No Response Count	The response data field returns the quantity of message addressed to the slave for which it returned no response (neither a normal responses nor an exception response), since its last restart, clear counters operation, or power-up. It is said that the counter will calculate the quantity of none-error broadcast messages.
10H	Return Slave NAK Count	The response data field returns the quantity of message addressed to the slave for which it returned a Negative Acknowledge (NAK) exception response since its last restart, clear counters operation, or power-up.
11H	Return Slave Busy Count	The response data field returns the quantity of message addressed to the slave for it returned a Slave Device Busy exception response, since its last restart, clear counters operation, or power-up.
12H	Return Bus Character overrun Count	The response data field returns the quantity of messages addressed to the slave that it could not handle due to a character overrun condition ,since its last restart, clear counters operation, or power-up.

9. Error messages (Error code)

Messages	Reason	Dispositions
Err 1 ppm CAL	SLOPE value exceeds the upper or lower limit	Maintain the electrode or change a new electrode, and make another calibration.
Err 3 ppm CAL	The readout is unstable	Please check whether there is bubble or air in the glass end of the electrode; maintain the electrode or change a new electrode, and make another calibration.
Err 4 ppm CAL	During calibration, the buffer solution temperature exceeds a range of 5～50˚C	Please adjust the buffer solution temperature to the appropriate temperature range and make another calibration.
Err 6 ppm CAL	The three point calibration does not be calibrated in an order.	Please follow the correct calibration order. (from high point to low point , or from low point to high point)
Err 9	Serious error that does not permit any further measuring	Please call service engineer.

10. Maintenance

Generally speaking, under normal operation, the controller produced by our company need no maintenance expect regular cleaning and calibration of the electrode to ensure accurate and stable measurement and system operation.

Instructions of sensor:

A. Before measurement, clean the sensor with de-ionized water until the potential becomes zero (blank), and it is ready to be used.
B. Before measurement, make sure that there is no air bubble inside or out side measurement lens, in order to ensure the steadiness of measurement.
C. When measuring, the stirring speed in the vessel should be slow and steady.
D. If the sensor is not used in long period, it should be clean with de-ionized water until the potential becomes zero(blank), wipe dry and reserve it.
E. Do not clean the lens with sharp objects. Do not wipe the detector with solvent such as benzene. Do not apply oil such as grease to the detector. If there is stain, please use soft cloth with ethanol and wipe it.

※ **The cleaning cycle for the sensor depends on the pollution degree of the measurement sample. Generally speaking, it is recommended to make monthly cleaning & calibration, or please follow the operation manual of sensor and clean it.**

SUNTEX

SUNTEX INSTRUMENTS CO., LTD.

13F, No. 31, Lane 169, Kangning St.,
Xizhi Dist., New Taipei City, Taiwan (R.O.C.)
Tel: 886-2-2695-9688
Fax: 886-2-2695-9693
e-mail: suntex@ms1.hinet.net

www.suntex.com.tw/en

5040C IT-8100-RS/Technical data subject to alternations/ Quality Systems ISO 9001/201210