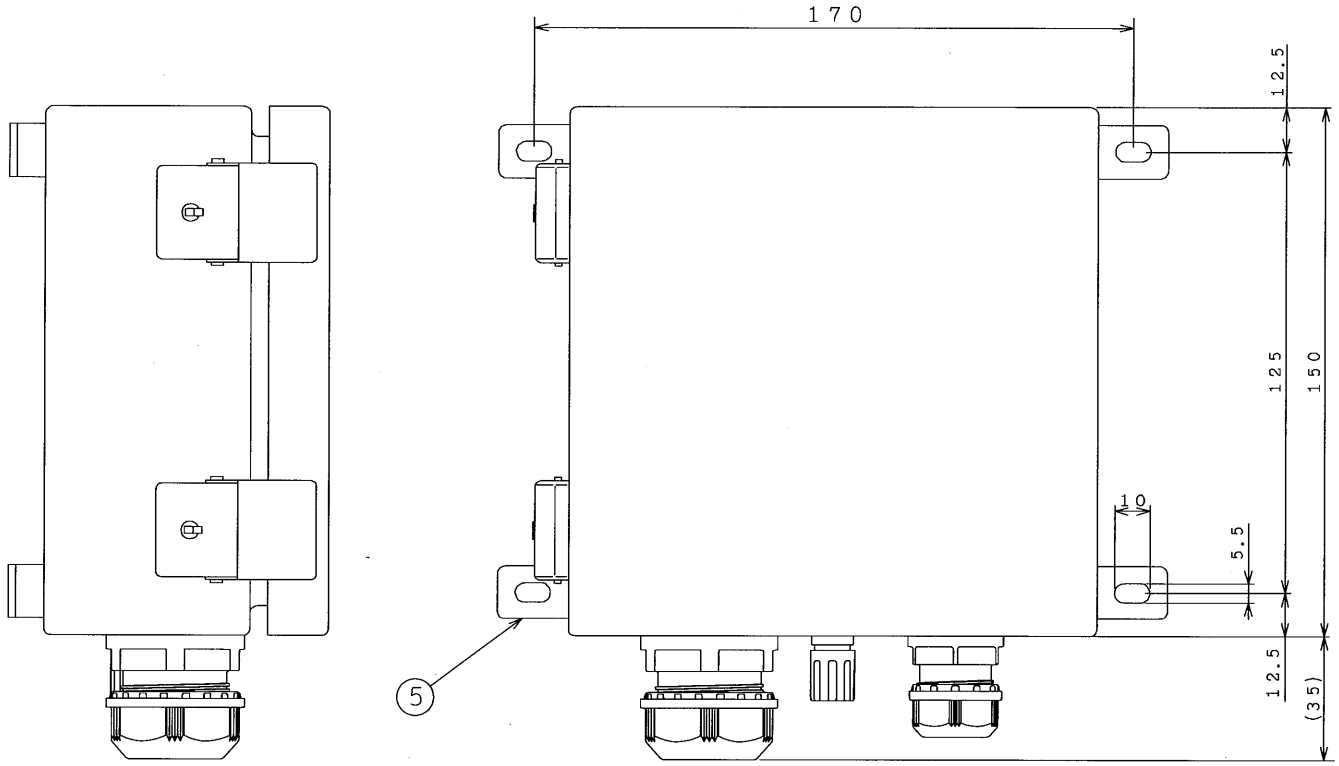

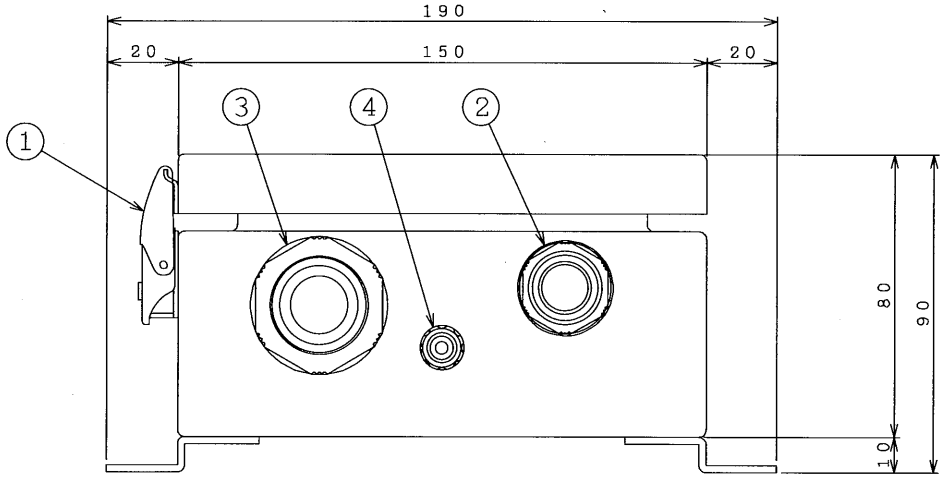

Figure－3
Appearance of ultrasonic repeater

PR－22

all dimension in mm

5	INSTALLATION FOOT
4	GROUND TERMINAL
3	CABLE INLET (φ11~16)
2	CABLE INLET (φ7~9orφ11~13)
1	LATCH
No.	Nomenclature
Body material	SUS304
Date	´10.12.09
Drawing name	Appearance of ultrasonic repeater
Drawing No.	EA－A－13A
Drawn by	T. SUZUKI
Checked by	Y. Tomura
Approved by	S. Hatano
FUJI ULTRASONIC ENGINEERING	