PC-3310-RS Intelligent pH/ORP Transmitter

Operation Manual

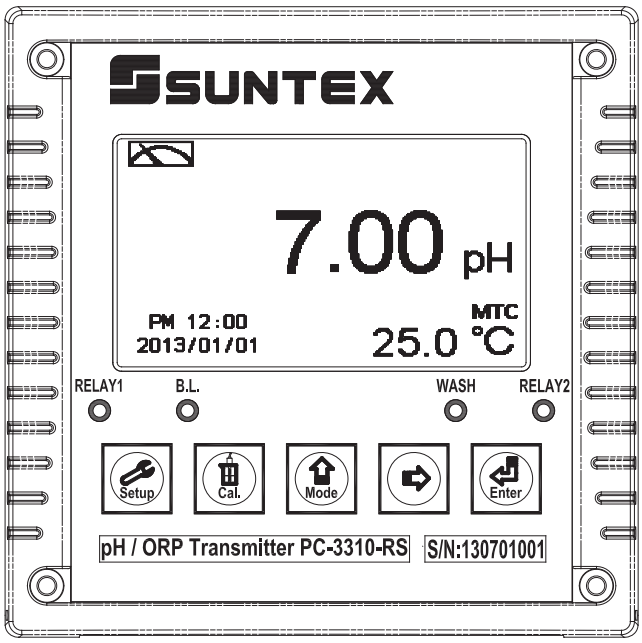

SUNTEX

CONTENTS

Thank you for purchasing Suntex products. In order to continually improve and enhance the transmitter's function, Suntex reserves the right to modify the content and icon display of the product. The actual situation is subject to the instrument without notice. The operation manual is only provided for function and installation description, Suntex Instruments Co., Ltd. is not liable for any person or entity for any direct or indirect loss or damage due to improper usage of this product. If you have any questions or find omission, negligence or mistakes of the operation manual, please contact with our staff, thank you.

Precautions for installation

Wrong wiring will lead to breakdown or electrical shock of the instrument, please read this operation manual clearly before installation.

- Make sure to remove AC power from the transmitter before wiring input, output connections, and remove it before opening the transmitter's housing.
- The installation site of the transmitter should be good in ventilation and avoid direct sunshine.
- The material of signal cable should be special coaxial cable. Strongly recommend using our coaxial cable. Do not use normal wires instead.
- Avoid electrical surge when using power. Especially when using three-phase power, use ground wire correctly. If the power surges interference occurs, separate the power supply of transmitter from the control device, such as: dosing machines, mixers, etc. to make individual power supply for the transmitter; or set surge absorber to reduce the power surges at all electromagnetic switches and power control device coils.
- The internal relay contact of the instruments is for alarm or control function. Due to safety, **please must connect to external relays which can stand enough ampere to make sure the safety operation of the instrument.**（Please refer to chapter 3.7 "Illustration of electrical connection"）
- There shows LABEL on the display any time, so there are not showing the graphic menu of function descriptions in this operation manual.

Brief Instruction

Description of set-up settings（see chapter 7 for details）

press [Setup] and [Mode] simultaneously to see the overview of the set-up settings now. Then press [Enter] if you would like to modify set-up settings. Press keypad according to index of keypad on the screen.

Index of keypad：

keypad	Accordingly item	Description
Setup	SET:Back	Back to upper layer
Mode	▲: ◢	Choose leftward of change to left page
	▲: +	Increase digit
⇨	▶: ◣	Choose rightward of change to right page
	▶: —	Decrease digit
Enter	ENT:Enter	Confirm settings after modifications and then go through next step

Selection of set-up items：

keypad	Accordingly item	Description
Mode		Measurement mode, to choose pH or ORP measurement
Multi-Cal.	1 2 3	Multi-point calibration, to choose 1, 2, or 3 points calibration (PC-3310 provides up to three points calibration)
Temperature	℃	Temperature measurement and compensation, including MTC, PTC, NTC (3 types total). MTC---Manual temperature compensation, PTC/NTC--- auto temperature compensation
Relay 1	1	First relay setting, to choose action off or Hi/Lo alarm

Relay 2		Second relay setting, to choose action off or Hi/Lo alarm
Clean		Automatic wash time setting, to choose electrode clean equipment's ON and OFF duration
Analog 1		Current output according to pH or ORP setting range
Analog 2		Current output according to temperature setting range
Clock		Clock setting **(When out of power and reboot it, the instrument's time setting will return to the factory pre-setting)**
Digital Filter		Take every serial 1~60 measurements, average them continuously, and make it as the readings
Back Light		Backlight setting, to set Auto/ON/OFF backlight, brightness, and sensitivity
Contrast		Contrast of screen setting
Return		Setting of returning to the measurement mode
Code		Security code of set-up mode. The set-up code is precedential to calibration code, thus it can pass a different security code of calibration.
Language		Available for English, Traditional Chinese, Simplified Chinese

Description of calibration settings（see chapter 8 for details）

Press [Cal.] and [Mode] simultaneously to see the last calibration information. Then press [Enter] if you would like to make a new calibration or modify setting of calibration. Press keypad according to index of keypad on the screen.

Index of keypad：

keypad	Accordingly item	Description
Cal.	CAL:Back	back to upper layer
Mode	▲: ◢	Choose leftward of change to left page
	▲: +	Increase digit
⇨	▶: ◣	Choose rightward of change to right page
	▶: —	Decrease digit
Enter	ENT: Enter	Confirm settings after modifications and then go through next step

Selection of calibration settings：

keypad	Accordingly item	Description
TECH	TECH	Use TECH buffer as standard solution for calibration
NIST	NIST	Use NIST standard buffer (DIN 19266) as standard solution for calibration
Any	Any	Use any buffer solution by users' definition for calibration
Define	DEF	Preset five standard buffer solutions to make users change the default value. Establish and save the suitable standard buffer pH/temperature data that stores up to five groups to make a calibration
Return	↻	Time interval setting of returning to the measurement mode
Code	🔒	Security code of calibration mode.

1. Specifications

Model		**PC-3310-RS**
Measuring modes		pH / ORP / Temp.
Ranges	pH	-2.00~16.00 pH
	ORP	-1999~1999 mV
	Temp.	-30.0~130.0 °C
Resolutions	pH	0.01 pH
	ORP	1 mV
	Temp.	0.1 °C
Accuracy	pH	±0.01 pH (±1 Digit)
	ORP	±0.1% (±1 Digit)
	Temp.	±0.2°C (± 1 Digit), equipped with temperature error modification function
Temperature Compensation		NTC30K/ PT 1000 auto temperature compensation
		Manual adjustment temperature compensation
Calibration mode		TECH, NIST, Any Buffers, up to five point calibration
Remote pH Calibration		Modbus address provided for TECH, NIST buffers remote calibration
Ambient Temp.		0~50°C
Storage Temp.		-20~70°C
Input Impedance		> 10^{12} Ω
Display		Large LCM with sensitization sensor for auto/manual illumination function and contract function
		Text mode: Numerical display
		Chart mode: 3 mins real-time dynamic graph
		Trace mode: Set up from 3 mins to four weeks duration of the measured value trend graph
Analog Output		Isolated DC 0/4~20mA corresponding to main measurement, max. load 500Ω
Logbook		50 sets of important events & error diagnostic records
RS-485 Interface		Isolated, MODBUS protocol
Modbus Communication		Provide measurements, calibration data, sample adjustment, event logbook, etc., parameter readout and setting
Control Settings	Contact	RELAY ON/OFF contact，240VAC 0.5A Max.(recommended)
	Activate	Hi/Lo. Hi/Hi. Lo/Lo selectable two programmable set-points
Wash		RELAY contact: ON 0~99min. 59sec. / OFF 0~999hr 59min.
Voltage Output		DC±12V，1W max., for PH-300T(optional)
Power Supply		100V~240VAC±10%, 6W max.，50/60Hz
Installation		Wall or Pipe or Panel Mounting
Dimensions		144mm × 144mm × 115mm (H×W×D)
Weight		0.8Kg
Protection		IP65(NEMA 4X)

Note: The specifications are subject to change without notice.

2.Assembly and installation

2.1 Transmitter installation

This transmitter can be installed through panel mounting, wall mounting and 2” pipe mounting.

Installation of panel mounting: First, prepare a square hole of 138mm x 138mm on the panel box, and then insert the controller directly into the panel box. Insert the accessorial mounting bracket from the rear, and make it be fixed into pickup groove.

2.2 Illustration of panel mounting

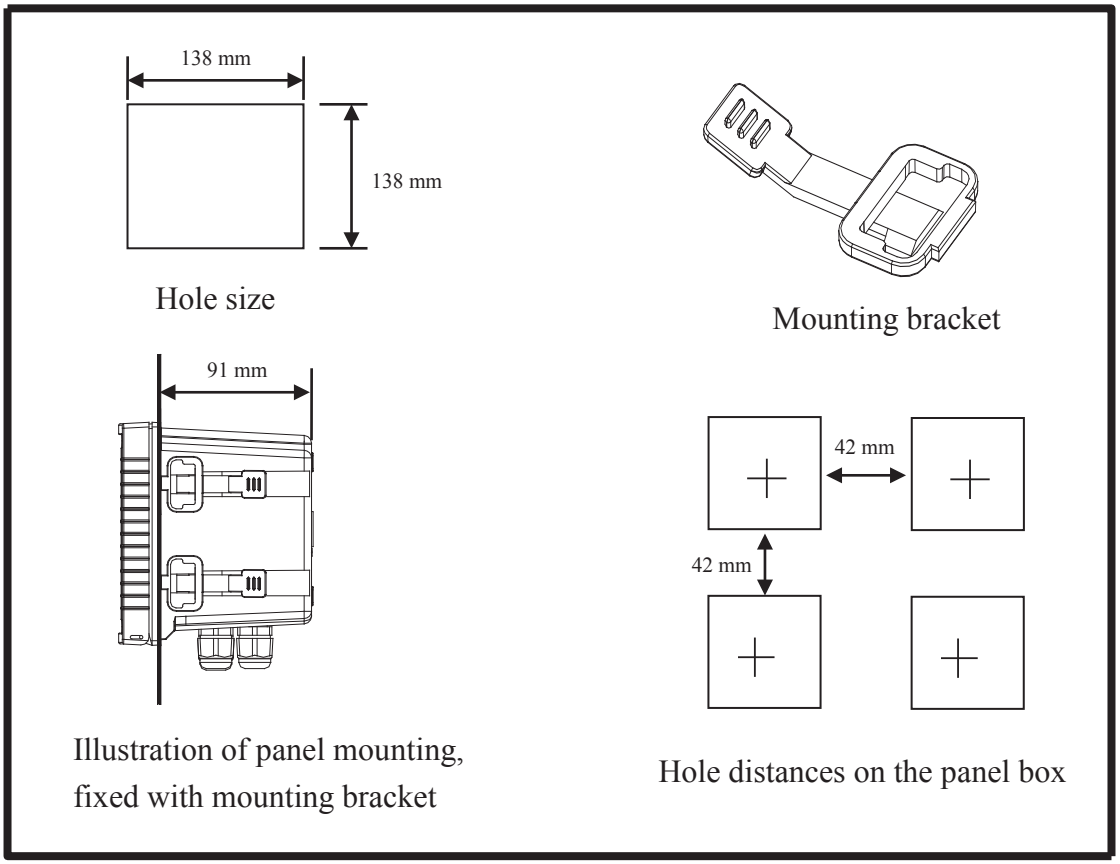

2.3 Illustration of wall mounting and pipe mounting

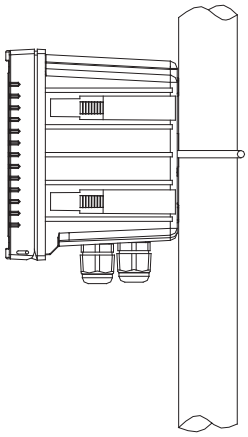

Installation of pipe mounting,

Fixed with U-shaped pipe clamp.

Optional, Order Number：8-34

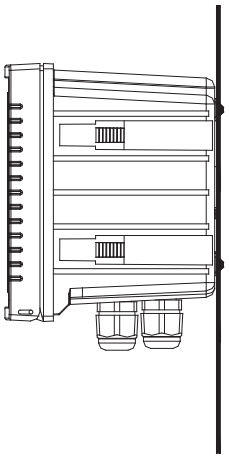

Installation of wall mounting.

Fixed with 4 x M5 screws.

Penetrate the two prepared holes in the rear cover and fix the U-shaped pipe clip, and then install two waterproof squeezed caps into the holes from inner rear cover to prevent from the water vapor.

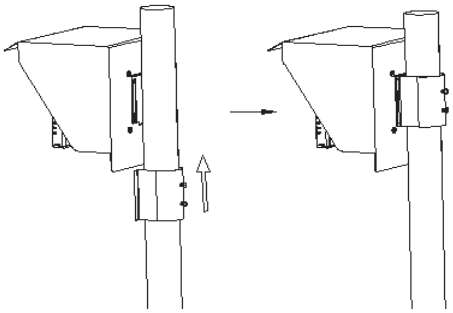

Sun shield (Pipe mounting, Optional)

Order NO：8-35＋8-35-1

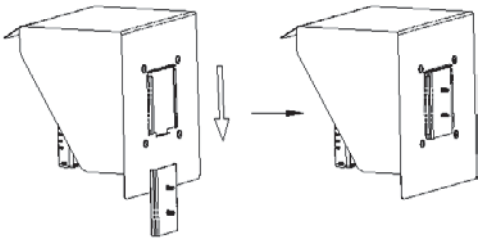

Sun shield (Wall mounting, Optional)

Order NO：8-35＋8-35-2

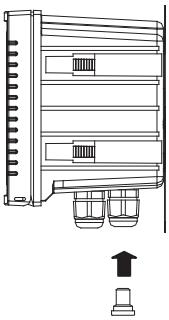

Insert the single hole rubber plug into the unused cable gland, and then tighten up the cable gland to prevent from the penetration of water proof.

2.4 Assembly of electrode and housing

2.4.1 Cable set-up

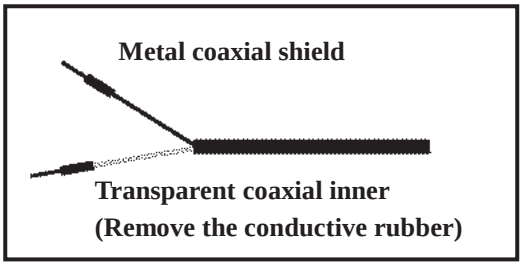

Set-up diagram of coaxial cable:
See the correct set-up method on the left:

Note: The black conductive rubber covering on the coaxial inner should be removed.

a. Make sure to remove the conductive rubber or aluminum-foil layer between the electrode signal wire and the coaxial shield.
b. Extend the cable to the transmitter without any joint except specific junction box. Connect the transparent coaxial inner directly to the Glass terminal on the back of transmitter, and metal connect coaxial shield to Ref. terminal.

2.4.2 Assembly of immersive electrode holder and junction box 8-09-5+ PP-100A(Optional)

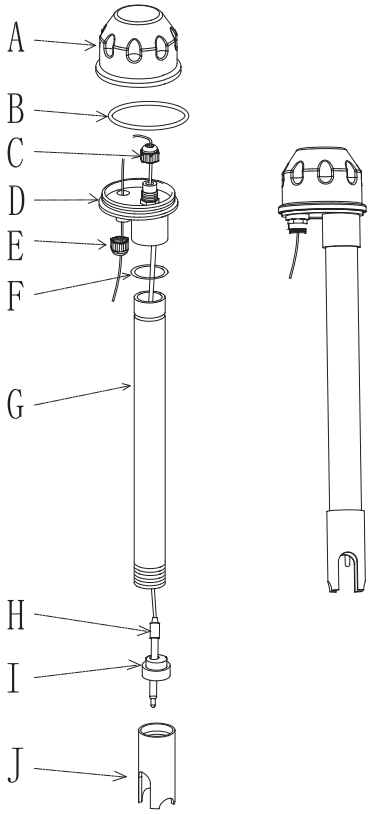

A------ Upper cover of round junction box
B------ O-ring
C------ Cable fixing gland MG16A
D------ Lower cover of round junction box
E------ Cable fixing point MG16A
F------ O-ring
G------ PP Electrode Protective Housing
H------ Electrode (Sensor)
I------- Rubber electrode holder
J------- PP pipe protective cover

1. Insert the electrode**(H)** through PP Electrode Protective Housing**(G)**
2. Rinse the electrode**(H)** properly, so that it can be easily pass through Rubber electrode holder**(I)**, leave about 5cm bellow.
3. Install the prepared Rubber electrode holder **(I)** into PP Electrode Protective Holder**(G)** and fix with PP pipe protective cover**(J)** tightly.

4. Insert the Electrode cable**(H)** through Lower cover of round junction box**(D)** and Cable fixing gland**(C)**, and use Lower cover of round junction box**(D)** to fix PP Electrode Protective Housing**(G)** tightly.
5. Prepare 15cm cable in the PP pipe, and then fix Cable fixing gland MG16A**(C)** tightly. Leave Electrode cable**(H)** for about 12-14cm, and split it carefully.
6. Fix the terminal of electrode coaxial inner on terminal block 1 of round holder; Fix the terminal of electrode coaxial shield on terminal block 3. (See the instruction of junction box)
7. Extend the cable to pass through Cable fixing gland**(E)** on Lower cover of round junction box**(D)**, and fix Cable fixing gland MG16A**(E)** tightly, leaving 12-14cm in the box for split.
8. Extend the lead coaxial inner and electrode coaxial inner to connect them; extend the lead coaxial shield to fix on the terminal block 3. Tight up Upper cover of round junction box**(A)** to finish the installation.

Installation of holder support base

The L-shaped electrode holder support base is installed by finding a appropriate position in the edge of a pool according to the field's needs with nails or expansion screws.

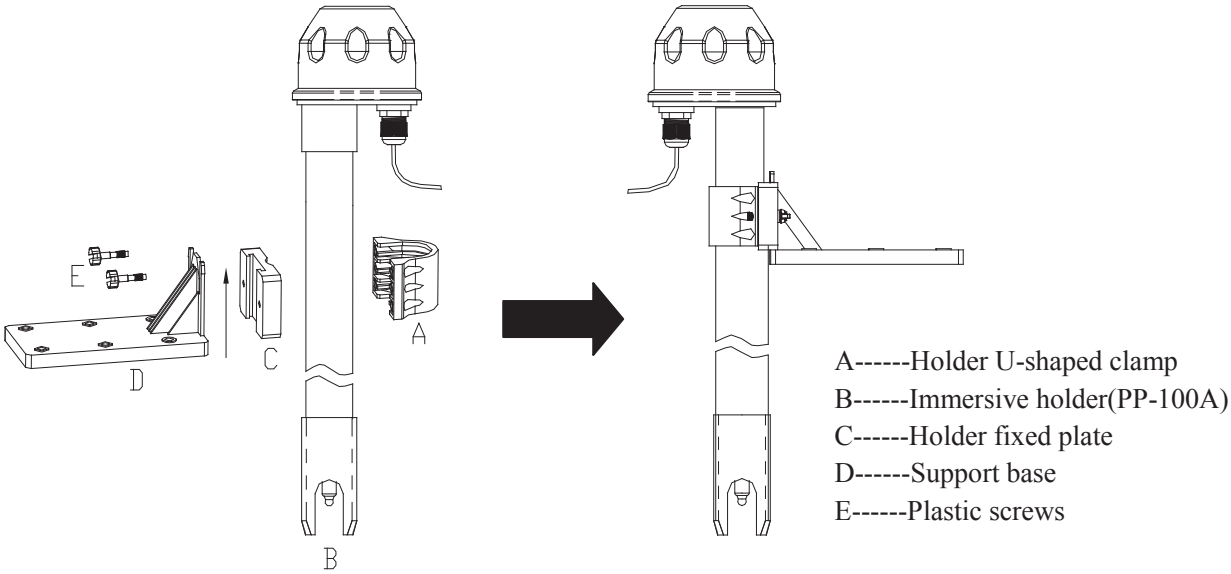

1. Fix the holder fixed plate(C) into the support base (D)
2. Fix the U-shaped clamp (A) into immersive holder (B)
3. Combine the item 1. and item 2., tighten it up by the plastic screws (E)

2.5 Illustration and description of junction box

(Two-wire distributing system
and Three-wire distributing system)

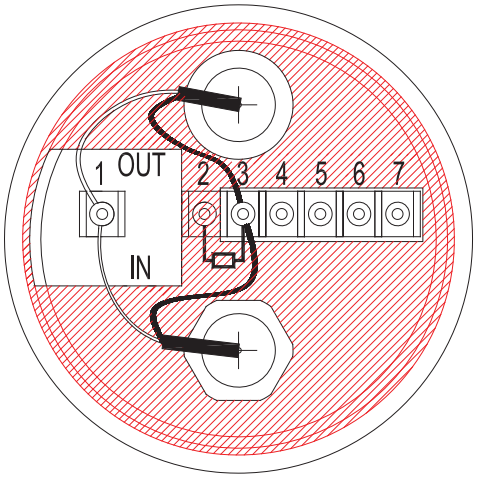

(1) Two-wire distributing system			
INPUT terminals	Terminal No.	OUTPUT terminals	Terminals on Transmitter
Coaxial inner	1	Coaxial inner's extension wire for electrode	GLASS
Shield (forbidden)	2	Shield (forbidden)	------
Coaxial shield	3	Coaxial shield's extension wire for electrode	REF
Temperature probe red wire	4	Red wire's extension wire for electrode	T/P
Temperature probe green wire	5	Green wire's extension wire for electrode	SG
Alternative	6, 7	Alternative	------

Note: 1. Extension cable, Order number: 7202-F94009-BK or 7202-RG-58
1.) If temperature probe is not used, the Order No. is 7202-RG-58.
2.) If temperature probe is used, the Order No. is 7202-F94009-BK.
2. If temperatures probe 8-26-3(NTC30K) or 8-26-8(PT1000) is used for two-wire distribution, the black wire terminal should be forbidden.

(2) Three-wire distributing system			
IN terminals	Terminal No.	OUT terminals	Terminals on Transmitter
Coaxial inner	1	Coaxial inner's extension wire for electrode	GLASS
Solution ground wire (Shield)	2	Solution ground wire	SG
Coaxial Shield	3	Coaxial Shield's extension wire for electrode	REF
Temperature probe red wire	4	Red wire's extension wire for electrode	T/P
Temperature probe green wire	5	Green wire's extension wire for electrode	SG
Alternative	6, 7	Alternative	----

Note: 1. The black wire on the temperature probes of 8-26-3(NTC30K) or 8-26-8(PT-1000) is used as special wire as solution ground rod which is to be connected at terminal 2.
2. The extension cable, Order Number: 7202-F94009-BK, is for system that apply a temperature probe or solution ground rod.

3. Overview of pH transmitter PC-3310-RS

3.1 Illustration of rear panel:

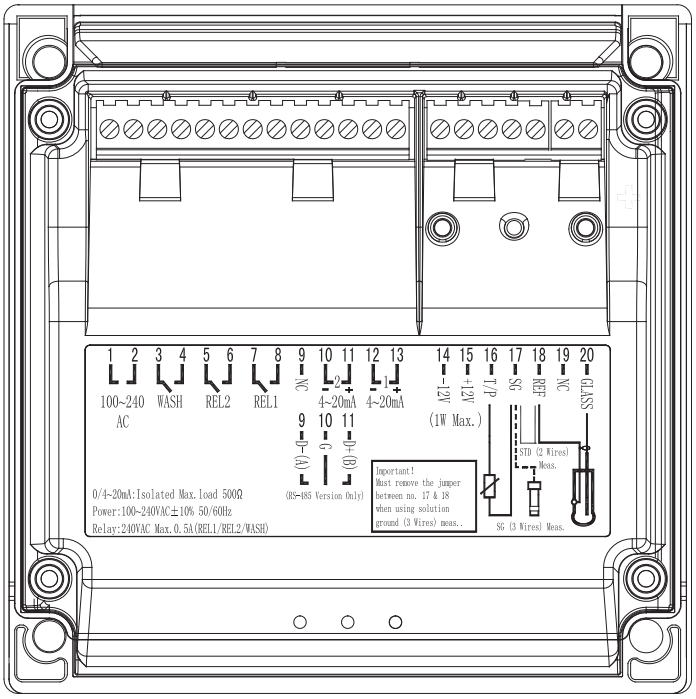

3.2 Illustration of terminal function:

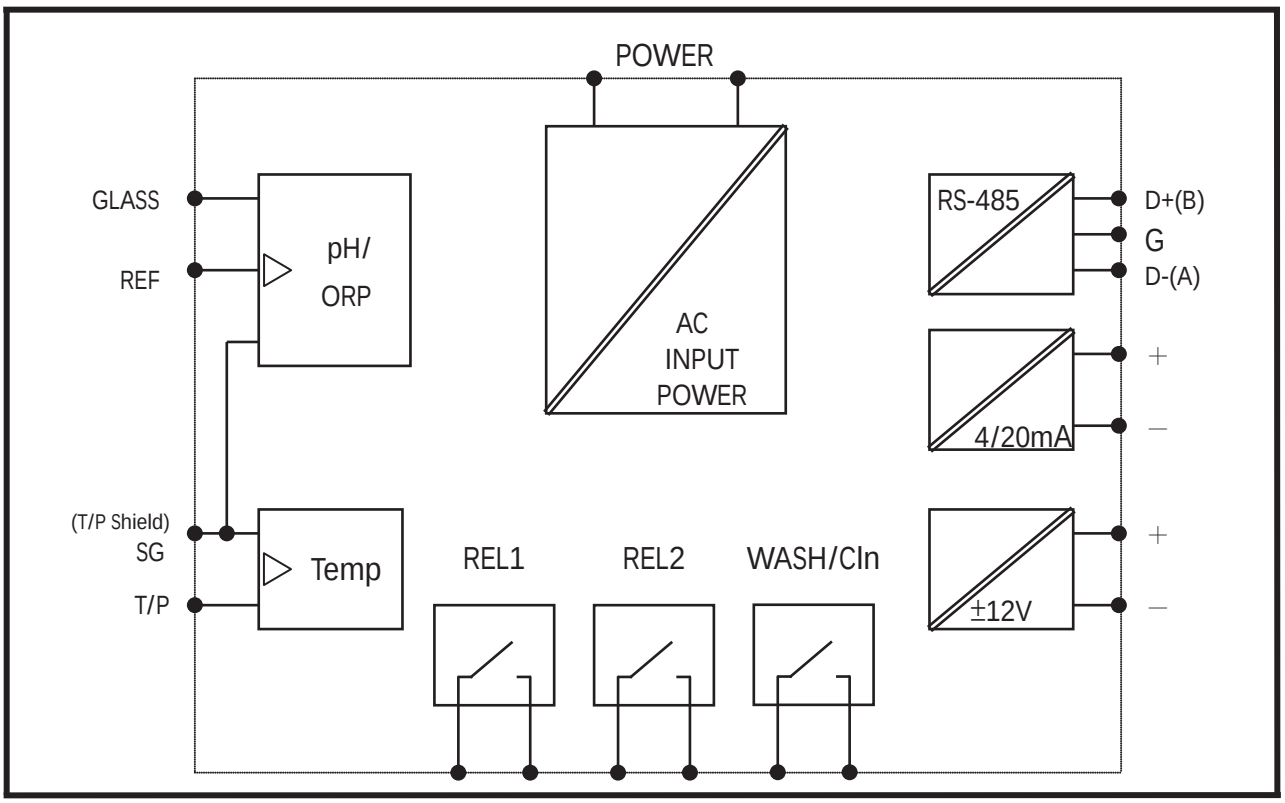

3.3 Description of terminal function

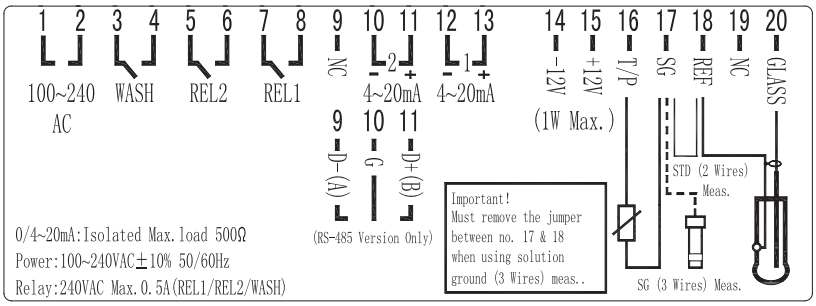

1, 2 — **100~240 AC**：Power supply terminal

3, 4 — **WASH**：Wash relay contact for an external relay

5, 6 — **REL2**：Second alarm control, the contact for an external relay

7, 8 — **REL1**：First alarm control, the contact for an external relay

9 — **NC / D-(A)**：RS485 output D-(A)

10 — **4~20mA -terminal / G**：RS-485 output GND

11 — **4~20mA +terminal / D+(B)**：RS-485 output D-(B)

12 — **4~20mA -terminal**：Master measure current output terminal -, for external recorder or PLC control

13 — **4~20mA +terminal**：Master measure current output terminal +, for external recorder or PLC control

14, 15 — **DC±12V**：Output terminal of direct current voltage ±12V **(PH-300T only)**

16 — **T/P**：Connect with one of cable end of temperature probe

17 — **SG**：Solution ground wire. **In two-wire distributing system, there should be a jumper between this terminal and REF (a short circuit slice is attached when going out the factory)**

18 — **REF**：Coaxial shield of pH/ORP electrode signal wire

19 — **NC**：None contact

20 — **GLASS**：Coaxial inner of pH/ORP electrode signal wire

3.4 Installation of accessorial transmitter PH-300T (Optional)

Accessorial pH/ORP transmitter, PH-300T, is mainly installed on the electrode protective pipe, but also can apply wall mounting and pipe mounting. For long distance transmission (100m), if PC-3110 is more than 30m far away from the electrode, PH-300T accessorial transmitter is recommended to avoid the attenuation of electrode signal, and for the convenience of onsite observation, measurement, and calibration.

Illustration of wall mounting type

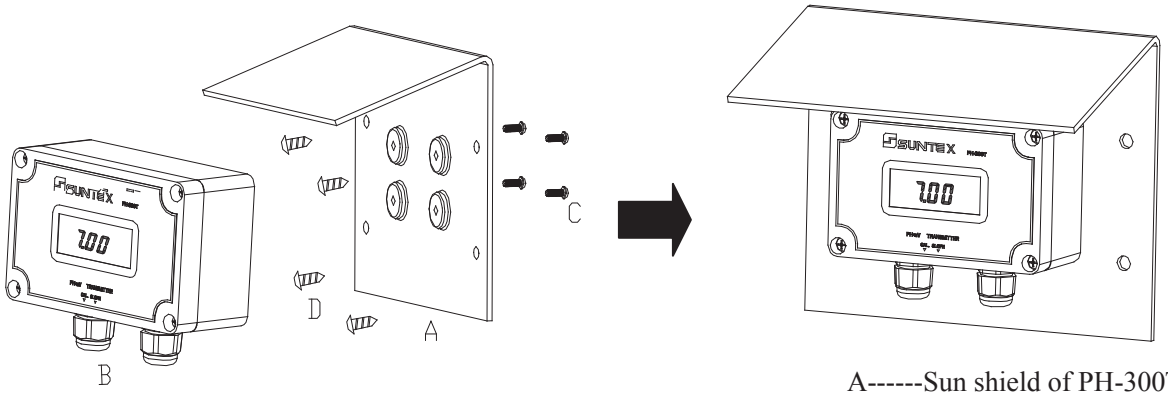

A------Sun shield of PH-300T
B------PH-300T transmitter
C------Round stainless steel screws 4x15
D------Self-tapping screws(by customers)

1. Combine the sun shield and PH-300T transmitter by round stainless steel screws 4x15
2. Fix item 1 combination on wall by self-tapping screws

Illustration of pipe mounting type

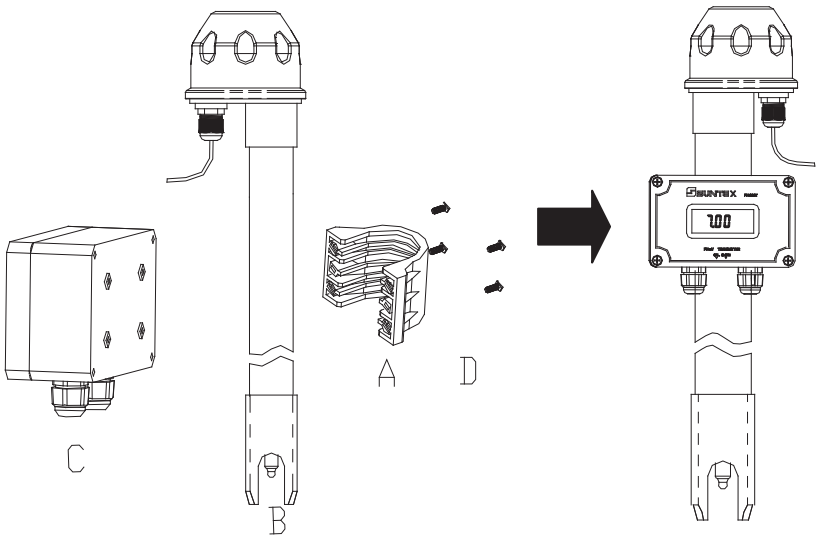

A------U-shaped clamp
B------Immersive holder
C------PH-300T transmitter
D------ Round stainless steel screws 4×15

1. Fix immersive holder(B) into U-shaped clamp(A)
2. Combine the item 1. combination with PH-300T(C) by Round stainless steel screws 4×15

3.5 Connection of transmitter PC-3310-RS and accessorial transmitter PH-300T

A. Connect the GLASS point of transmitter PH-300T's terminal to the electrode coaxial inner. (Note: Remove the black conductive rubber); connect the REF point of transmitter PH-300T's terminal to the electrode coaxial shield.
B. See the two-wire distributing system and three-wire distributing system in the following page.
C. Sign "PT-1000" on transmitter PH-300T's terminal is the connector for automatic temperature compensation probe, PT-1000, or applies a fixed temperature compensation resistance.
D. The V+ and V- of transmitter PH-300T's terminal respectively connect to DC12V+ and – of the controller.
E. The S+ and S- on transmitter PH-300T's terminal respectively connect to GLASS and REF of the controller.
F. The I+ and I- on transmitter PH-300T's terminal are output (4-20mA), which can connect to devices that receive current signals. **(Note: The current output signal of this transmitter is not insulating, and thus do not directly connect with a PLC!)**

Note: Refer to the following table for proper fixed temperature compensation resistance

Temperature	0°C	5°C	10°C	15°C	20°C
R value	1000Ω	1019.25Ω	1038.5Ω	1057.75Ω	1077Ω
Temperature	25°C	30°C	35°C	40°C	45°C
R value	1096.25Ω	1115.5Ω	1134.75Ω	1154Ω	1173.25Ω
Temperature	50°C	55°C	60°C	65°C	70°C
R value	1192.5Ω	1211.75Ω	1231Ω	1250.25Ω	1269.5Ω
Temperature	75°C	80°C	85°C	90°C	100°C
R value	1288.75Ω	1308Ω	1327.25Ω	1346.5Ω	1385Ω

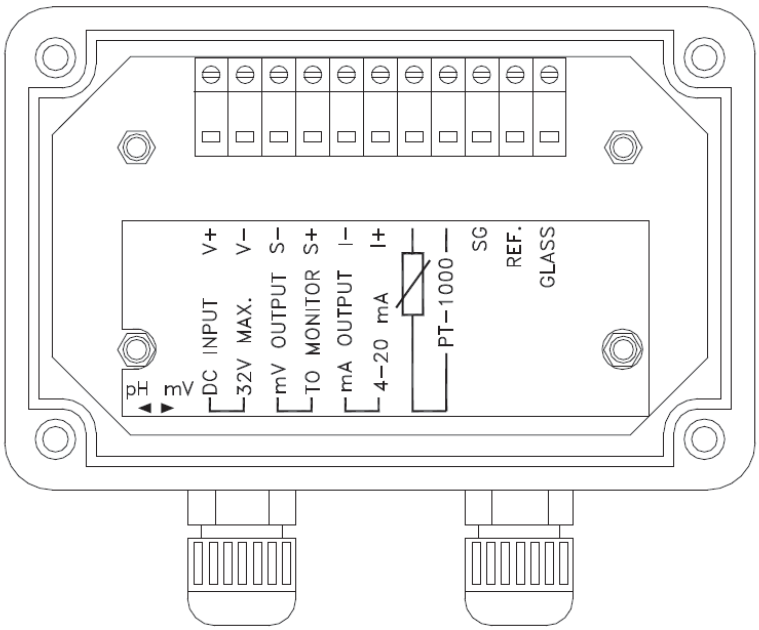

3.6 Typical wirings

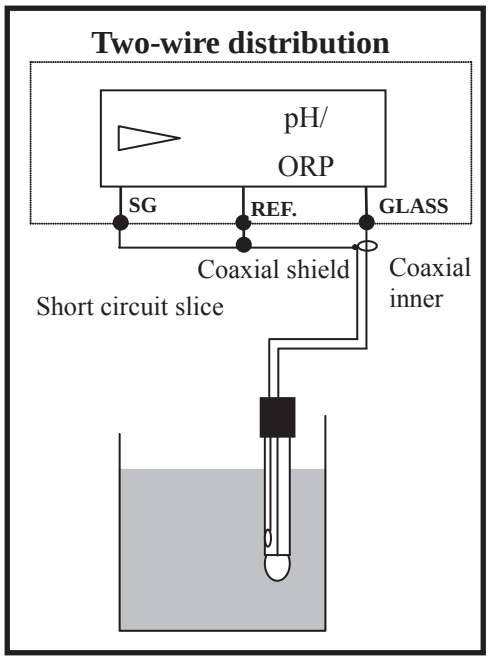

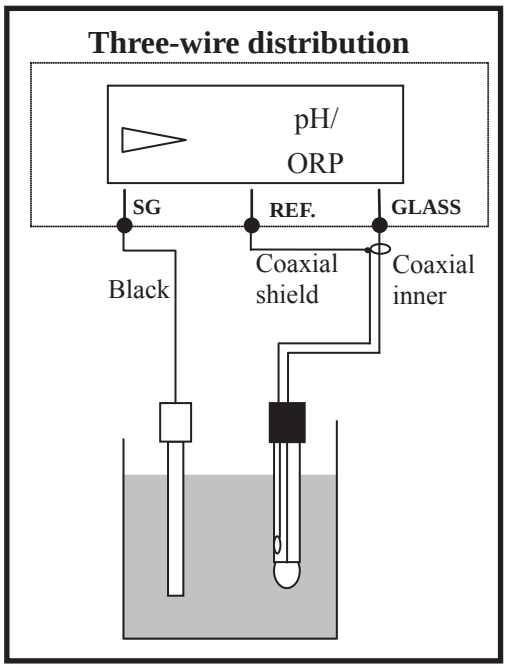

3.7 Illustration of electrical connection

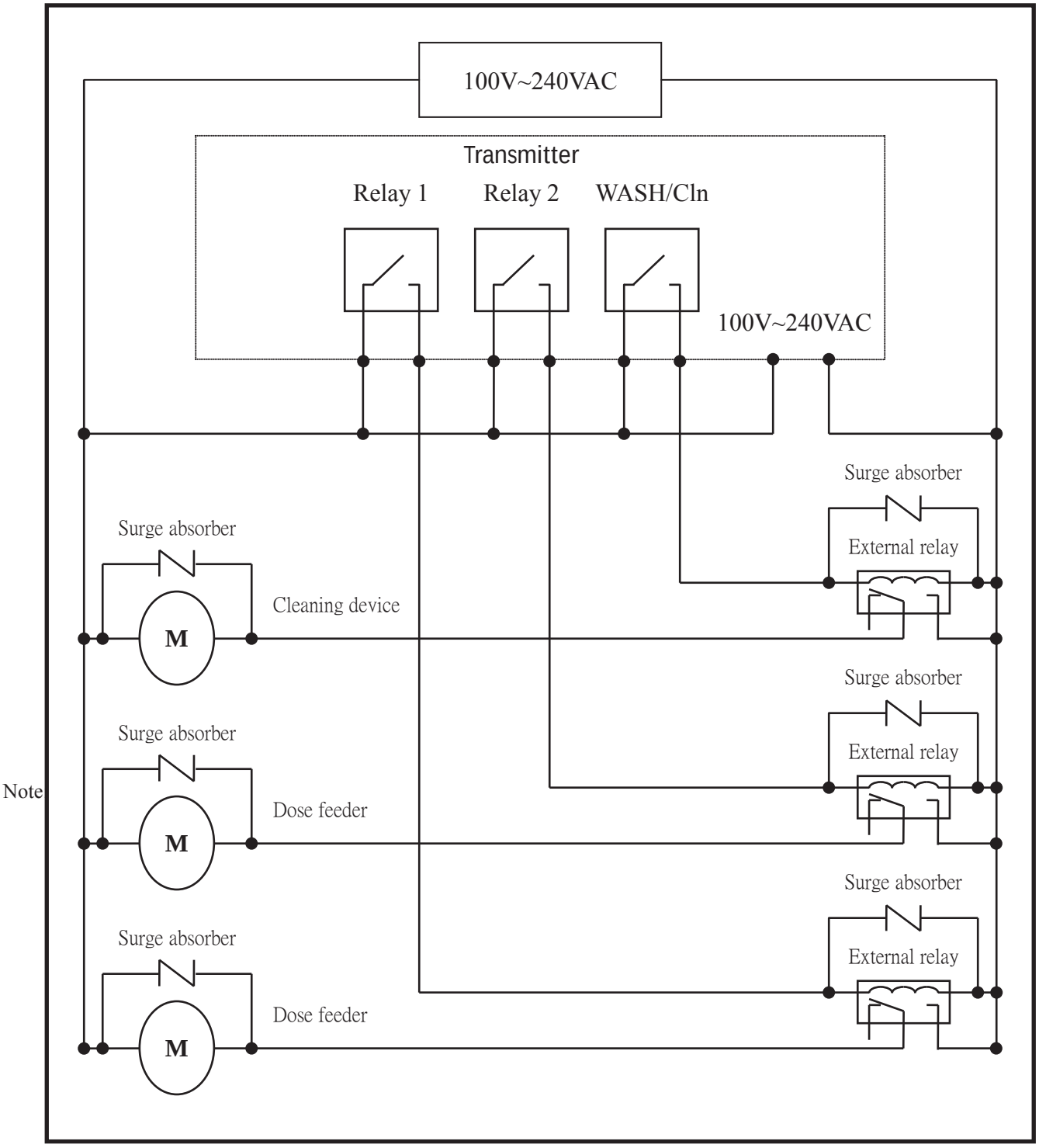

Note: The transmitter built-in miniature relays is necessary to be repaired and replaced by professional technicians.
It is recommended to use an external relay (Power Relay) to activate the external equipments.

3.8 Online pH/ORP measurement system（Optional）

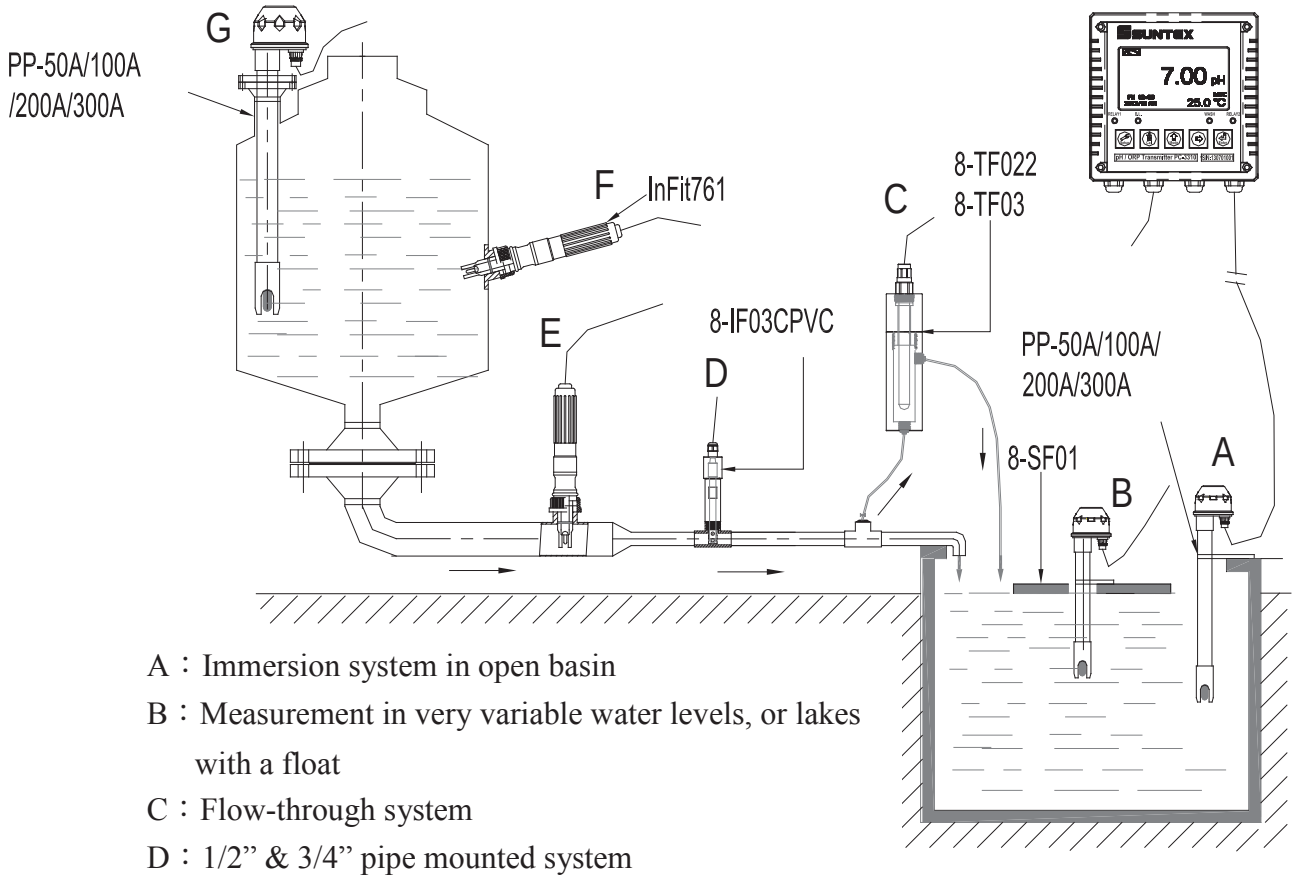

A：Immersion system in open basin

B：Measurement in very variable water levels, or lakes with a float

C：Flow-through system

D：1/2” & 3/4” pipe mounted system

E：1” pipe mounted system

F：Side-entry system in vessel

G：Top-entry system in closed vessel

4. Configuration:

4.1 Illustration of front panel:

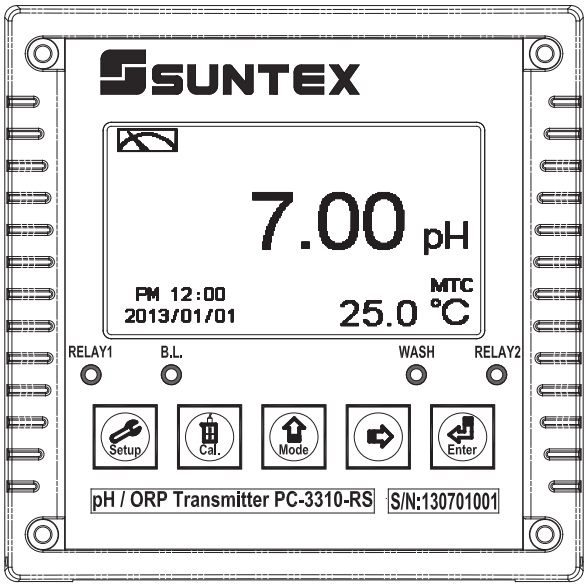

4.2 Keypad:

In order to prevent inappropriate operation by others, before the parameter setting and calibration, the operation applies multi-keys, and coding protection if necessary. Description of the key functions is in the following:

: In the parameter set-up mode, pressing this key allows you exit parameter set-up mode and back to Measurement mode.

: In the Calibration mode, pressing this key allows you exit Calibration mode and back to Measurement mode.

: 1. In the parameter set-up mode and Calibration mode, pressing this key to select leftward or change to another page.
2. When adjusting value, press this key to increase the value.

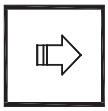

: 1. In the parameter set-up mode and Calibration mode, pressing this key to select rightward or change to another page.
2. When adjusting value, press this key to decrease the value.

: Key for confirmation; pressing this key is essential when modifying data value or selecting the parameter setting items in the window.

4.3 LED indicators:

WASH : Washing device operation indicator

RELAY1 : Controlling of dose feeding operation indicator (Relay 1)

RELAY2 : Controlling of dose feeding operation indicator (Relay 2)

B.L. : Light sensor; in the automatic display backlit mode, the lamp will light or go out as the change of environmental brightness.

5. Operation

5.1 Measurement mode:

After all electrical connections are finished and tested, connect the instrument to the power supply and turn it on. The transmitter will automatically entering measurement mode with the factory default settings or the last settings from user.

5.2 Set-up menu:

In the measurement mode, press [Setup] and [Mode] simultaneously to enter into set-up menu, and press [Setup] to go press to back to measurement mode. (Please see the settings in chapter 7)

5.3 Calibration menu:

In the measurement mode, press [Cal.] and [Mode] simultaneously to enter into calibration menu, and press [Cal.] to go back to measurement mode. (Please see the calibration in chapter 8)

5.4 Shortcuts:

1. In the measurement mode, if selecting MTC for temperature compensation mode, you may press [Mode] and [⇨] to adjust MTC temperature value.
2. In the measurement mode, press [Setup] continuously for two seconds to see the logbook, and then press [Setup] to get back the measurement mode.
3. In the measurement mode, press [Enter] continuously for two seconds to switch the display mode including digital mode, real-time mode, trace mode.

5.5 Default value:

5.5.1 Setting default value:

Measurement mode: pH
Multi-Cal:2 points pre-setting
Sample reading value adjustment: 0.00pH
Temperature compensation: MTC 25°C
Relay 1: High point alarm: AUTO, SP1= 10.00 pH, Hys= 0.10 pH
Relay 2: Low point alarm: AUTO, SP2 =04.00 pH, Hys= 0.10 pH
Wash time: OFF
Analog 1 current output (pH/ORP): 4~20 mA, 0.00~14.00pH
Date & Time: 2013 年 1 月 1 日 0 時 0 分 0 秒
RS-485: RTU, 19200, Even, 1, ID:001
Digital filter: 5
Backlight setting: Off
Contrast: 0
Logbook:None
Auto back: Auto, 3 minutes
Code set-up: OFF

5.5.2 Calibration default value:

Calibration type: TECH-No Cal
Slope: -59.15 mV/pH @ 25.0˚C
Asy: 0 mV
Sensitivity: 100.0%
Determination:1.0000
Calibration value: None data
Auto back: Auto, 3 minutes
Code set-up: OFF

Note: The factory default of calibration presetting is “No Cal”, and the calibration value is “None”. It means that the user has not calibrated the sensor with the transmitter yet. After finishing every calibration, the display shows the calibration type and the calibration value. If the equipments have not been calibrated yet, the measurement takes pre-set Asy and Slope into calculation. The factory default values are subject to change without notice.

6. Measurement display mode

6.1 Text mode

The text mode is for digit display, the content is as the following illustration. It mainly includes main measurement value and unit, temperature measurement value and unit, temperature compensation mode, and clock display.

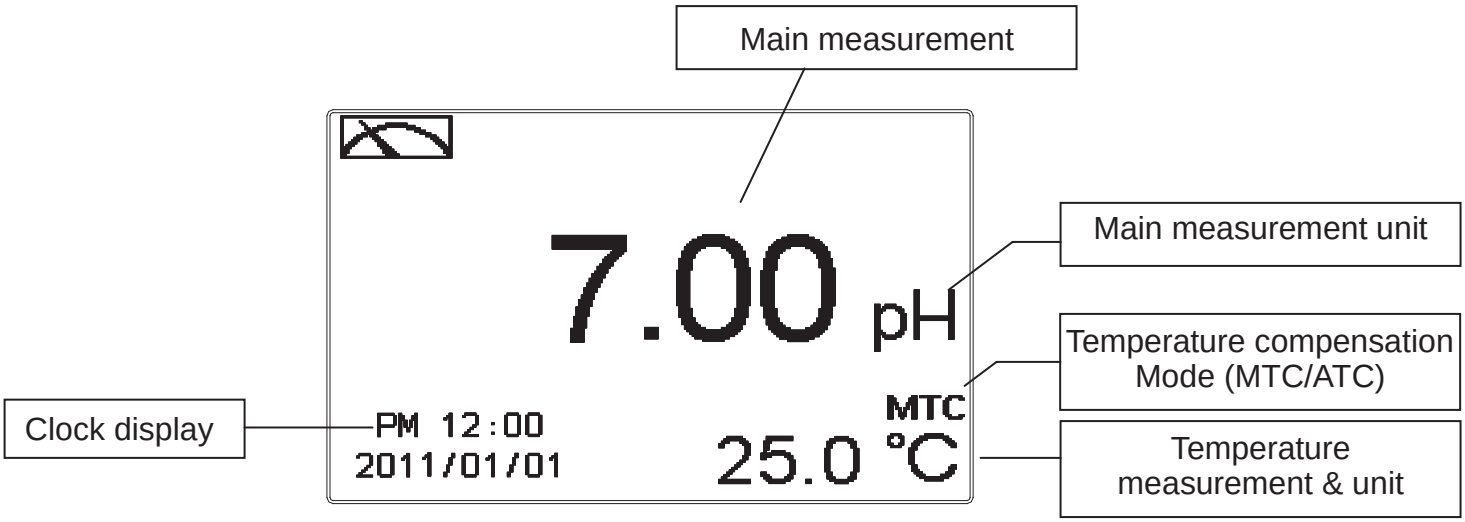

6.2 Real-Time Chart mode

Real-time chart mode is for dynamic display of real-time graphics. The duration is about three minutes of the recent changes in measured values of the curve. Users can set the mode to its corresponding pH / ORP measuring range (see section 7.4). The smaller the range is set, the higher resolution of the display is. When entering setup or calibration mode and returning to measurement mode, the real-time graphic will be re-updated. When the measured value exceeds a set range of the upper and lower limit, the graphics will be presented in the upper and lower limits dotted line. Real-time chart mode display is shown as below. There are also real-time measurement value, & unit, and temperature value & unit which are displayed in the bottom of the screen. The timeline in real-time graphic is divided into 12 depict, which is describe the range of representatives of each of 1 / 4 minutes (15 seconds).

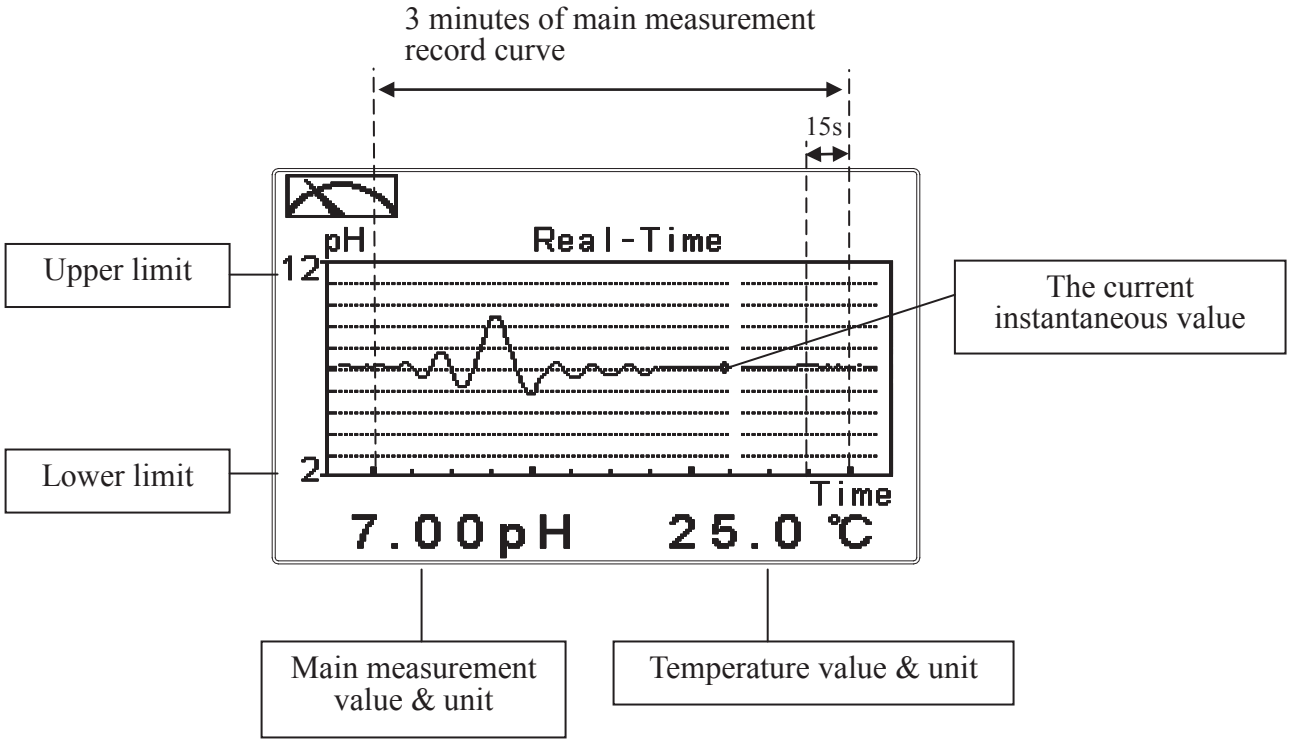

6.3 Trace mode

The feature of the trace mode is the record duration which can be set by the user (range from three minutes, up to four weeks). The trend graphic records the measurements in the past T time. The trend is recorded by the 60 group structure. Hence, each group of units is recorded in T/60 time interval. The trend line is constructed by all value data which is calculated to the average (Mean Value), maximum (Max Value) and minimum (Min Value) form. When the latest T/60 record shows in the rightmost of the trend graphic, all the previous record will be moved to the left side of the graphic. For example, T is set to 60 hours, then each set of records will be calculated to the average, the maximum, the minimum values after one hour(T/60 = 1), each time interval. Timeline of trends which is divided into 12 depictions showed on the horizontal axis of the display is on behalf of each characterization interval T/12. So, every depiction has 5 (T/60) sets of records. Users can set the corresponding pH / ORP measuring range in its set-up menu(see section 7.4). The smaller the range is set, the higher resolution of the display is. The trace mode is shown as below. There are also real-time measurement value, & unit, and temperature value & unit which are displayed in the bottom of the screen.

Attention: When the time interval has been reset, the trend in the data will not be retained, it will start a new trace record.

Note: The time display format (XX: XX) (hr: min), for example, appear as four weeks (672:00).

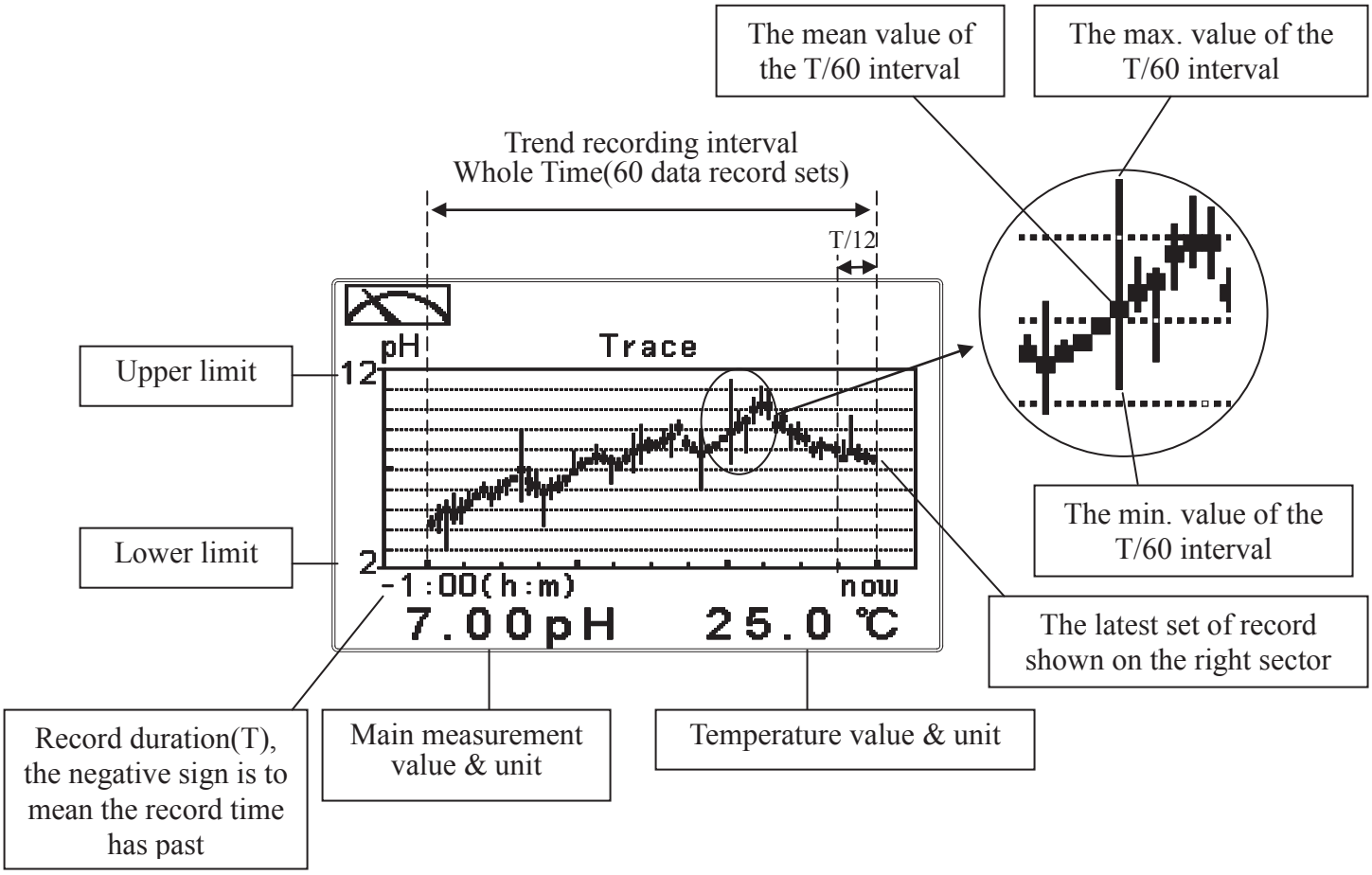

6.4 Warning symbols and text

1. When the wash device is turned on, the display shows and twinkles the description, “Clean Running”. At the same time, the ACT indicator LED lights up, and the transmitter automatically turns off Relay 1 and Relay 2 function. After finishing cleaning, the Relay 1 and Relay 2 will automatically back to normal status.
2. When Relay 1/Relay 2 which is set in high setting point is in action, the display shows and twinkles the description, “REL 1-HI/REL 2-HI”, and ACT indicator LED lights up. When Relay 1/Relay 2 which is set in low setting point is in action, the display shows and twinkles the description, “REL 1-Lo/ REL 2-Lo”, and ACT indicator LED lights up.
3. When the Analog 1 current output exceeds the upper/lower limitation, the display twinkles ”pH-mA ▲ / pH-mA ▼” or ”ORP-mA ▲ / ORP-mA ▼ “

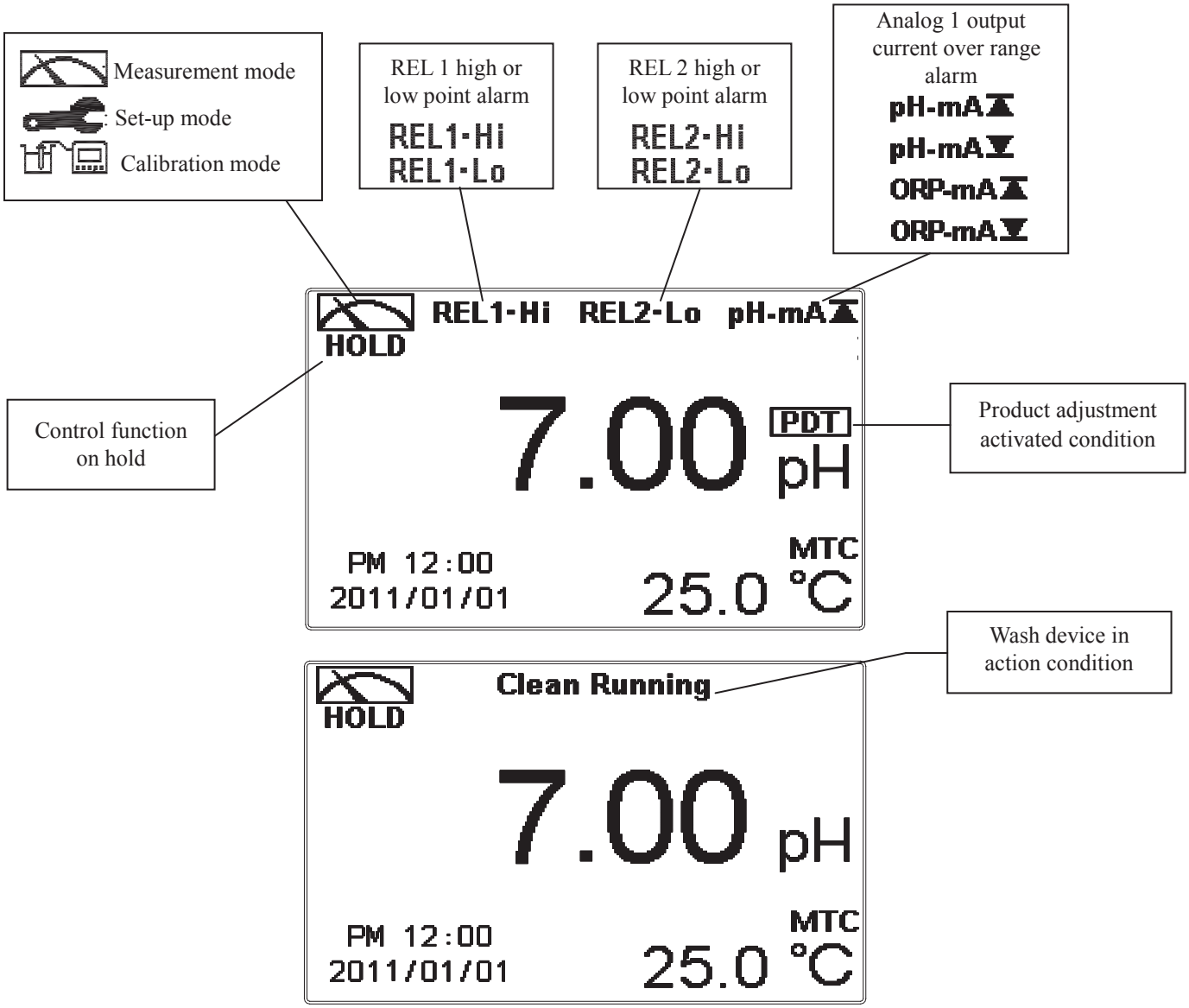

Note: The “HOLD” warning text appears when clean function is activated, or when entering setup menu, or when entering calibration menu. Under HOLD status, the corresponding display and output as follows:

1. Both Relay 1 and Relay 2 cease from action. If enter setting menu or calibration menu under clean status, the instrument will stop clean status automatically.
2. The current output which is corresponding to measurement value remains at the last output value before HOLD status.
3. The last signal output value of RS-485 interface is kept at the last output value before HOLD status. (Remote pH calibration will continue updating the value.)

7. Settings

Block diagram of setting-part 1

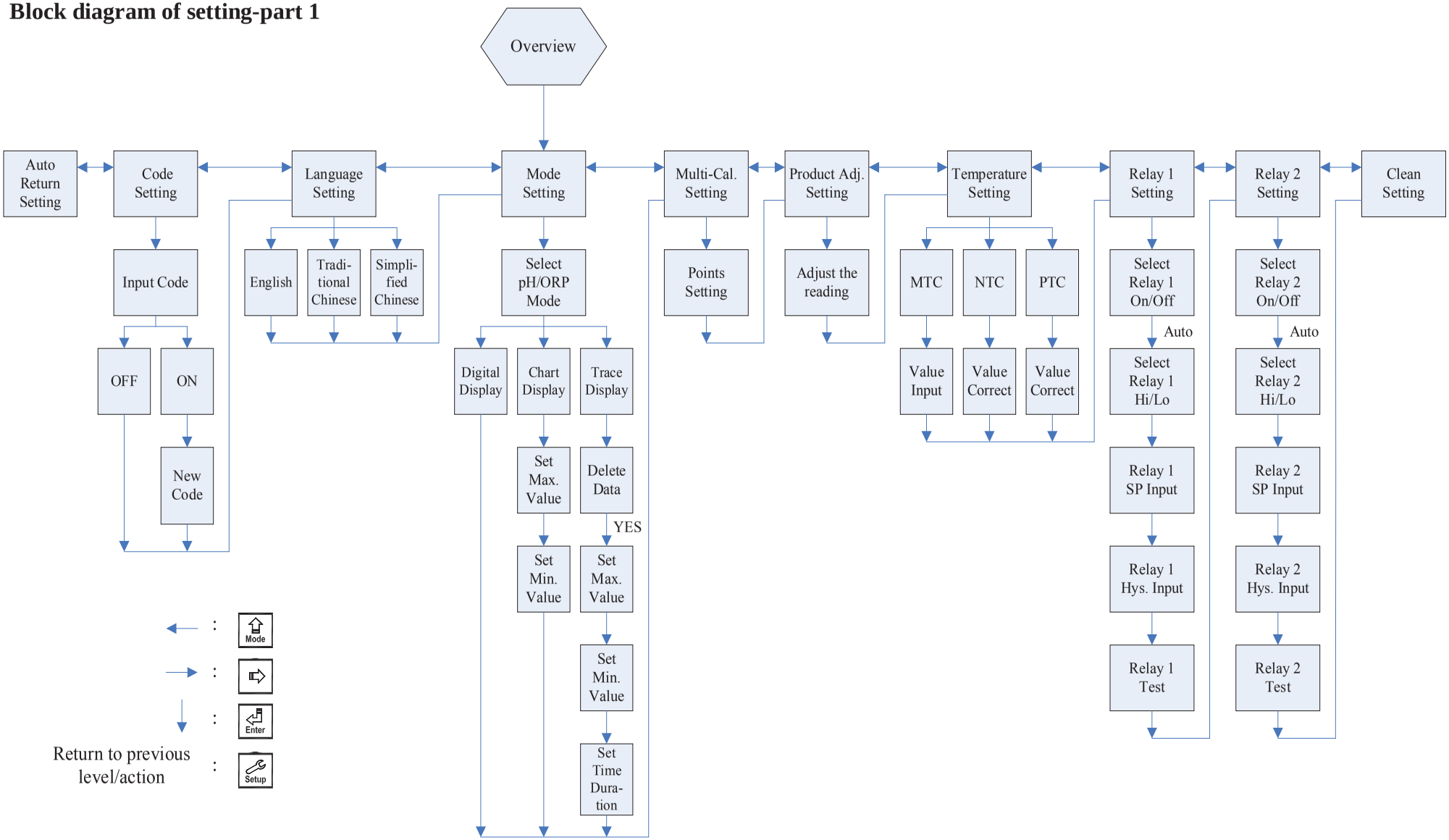

Continue on next page

Block diagram of setting-part 2

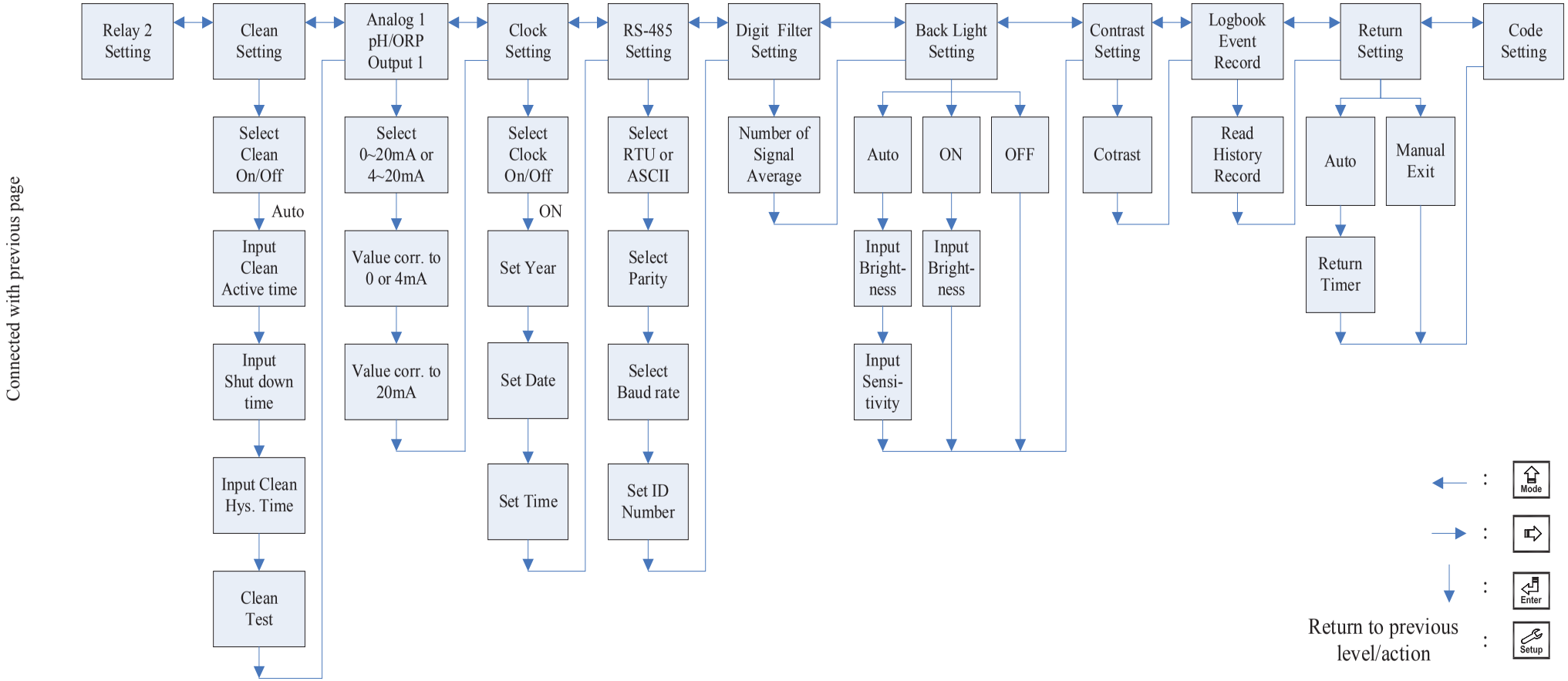

7.1 Entry of set-up menu

In the measurement mode, pressing the two keys Setup and Mode simultaneously allows you to enter the overview of current setting, and press Enter to enter the set-up mode to modify the setting if necessary.

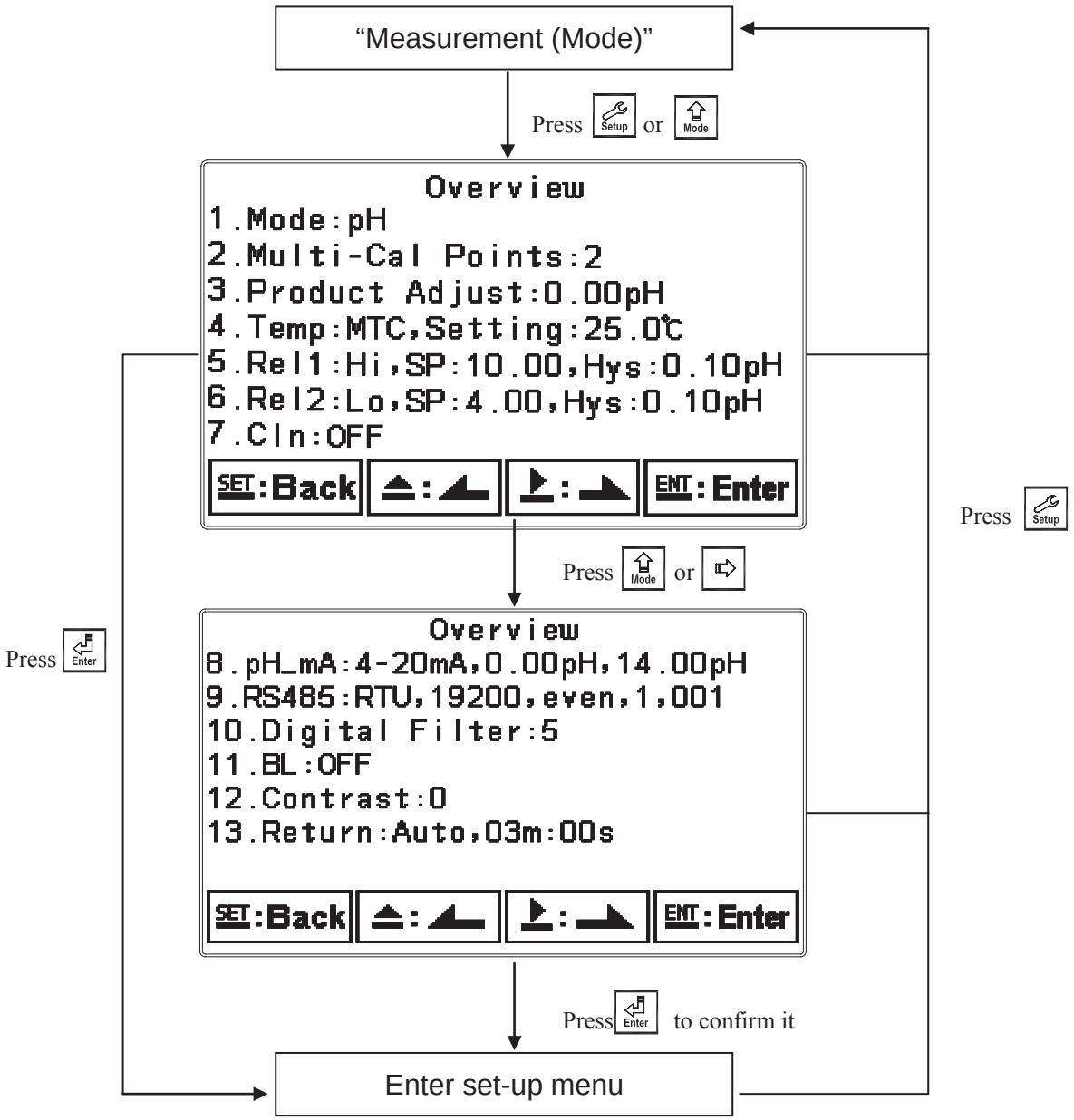

7.2 Security code of settings

After entering set-up mode, select “code” item, press Enter to enter into code procedure. **The code pre-setting is 1111.**

Note: The code of setting mode is prior to the code for calibration. That means that the code of setting mode can be used for the code of calibration mode.

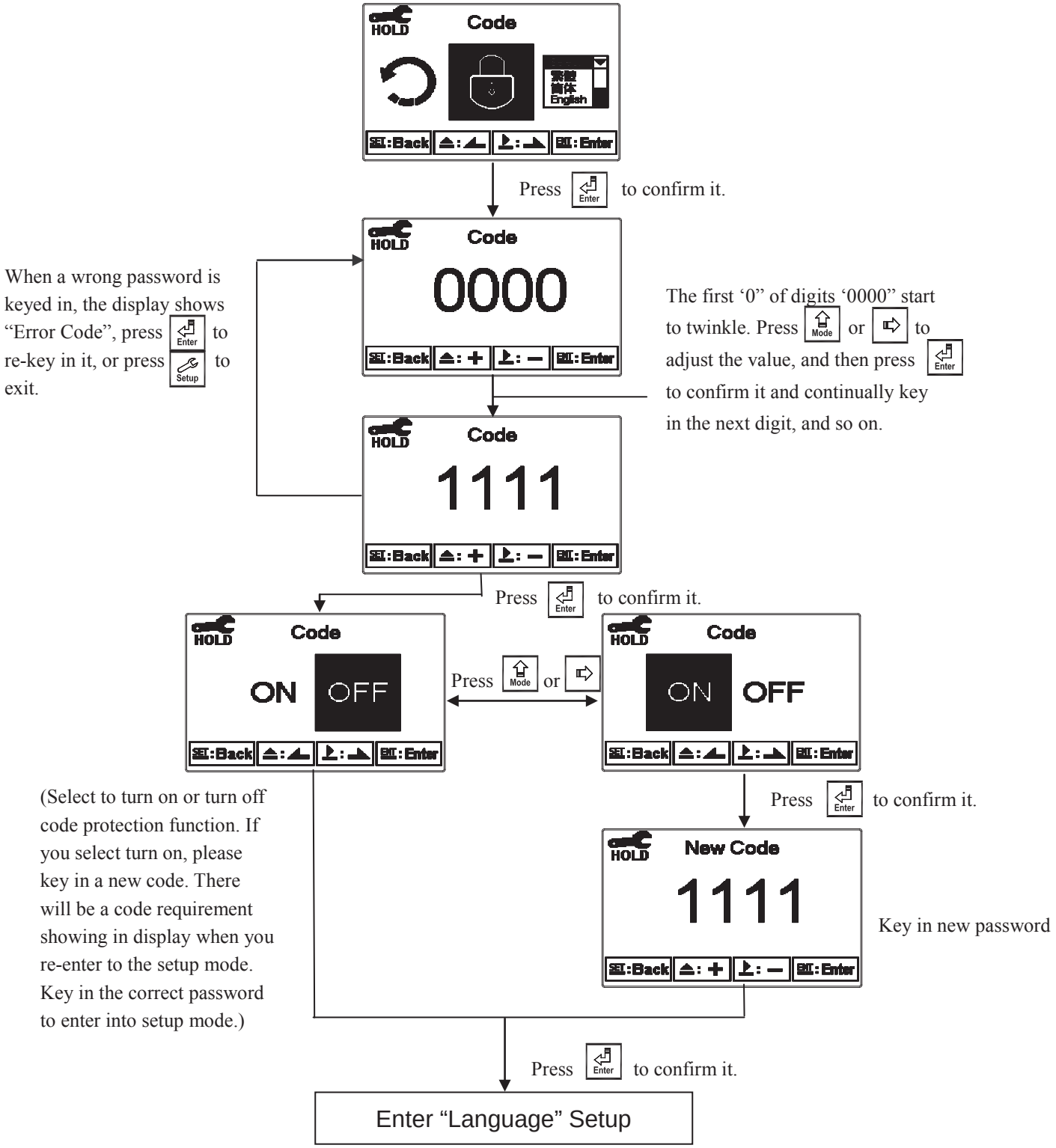

7.3 Language

Enter Language setup menu to select the system language from English, Traditional Chinese and Simplified Chinese.

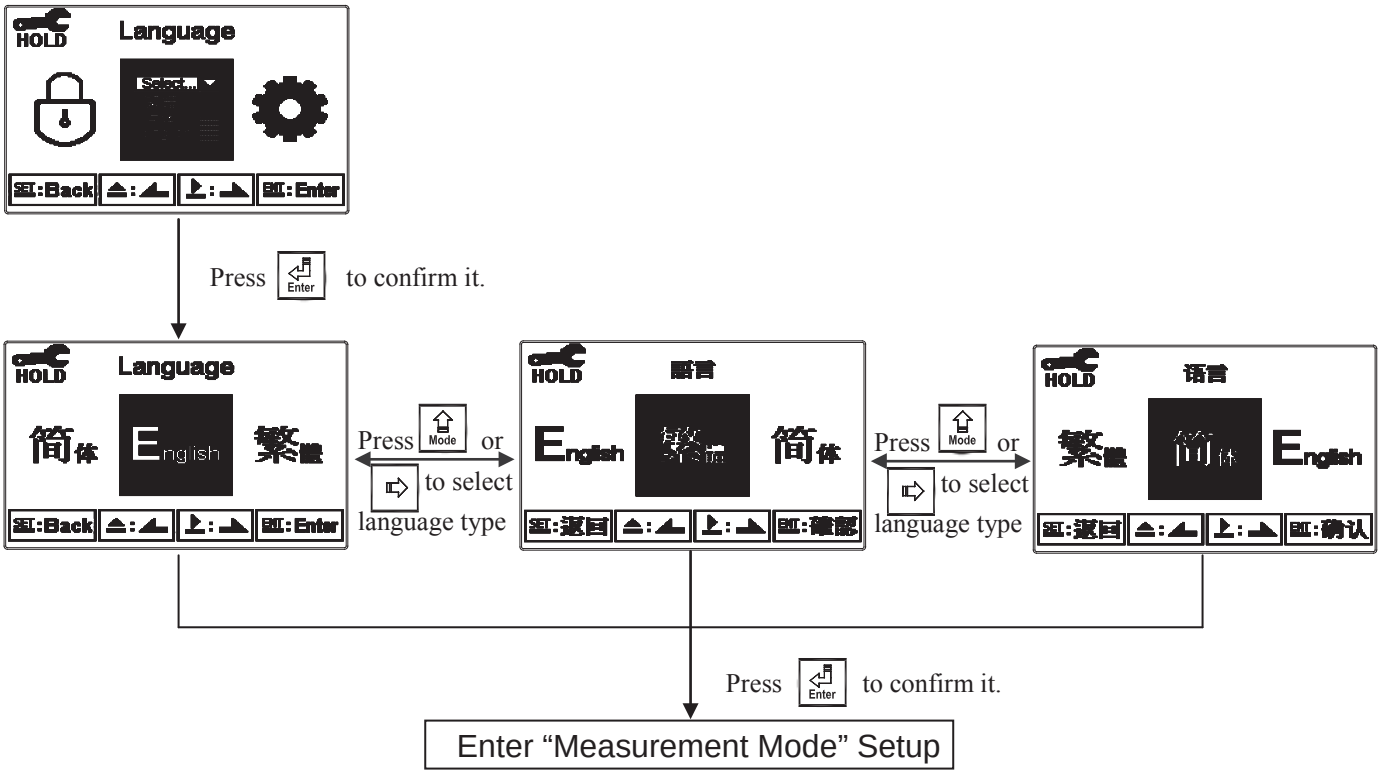

7.4 Mode

7.4.1 Enter setup of Mode, select pH measurement mode and select the display mode.

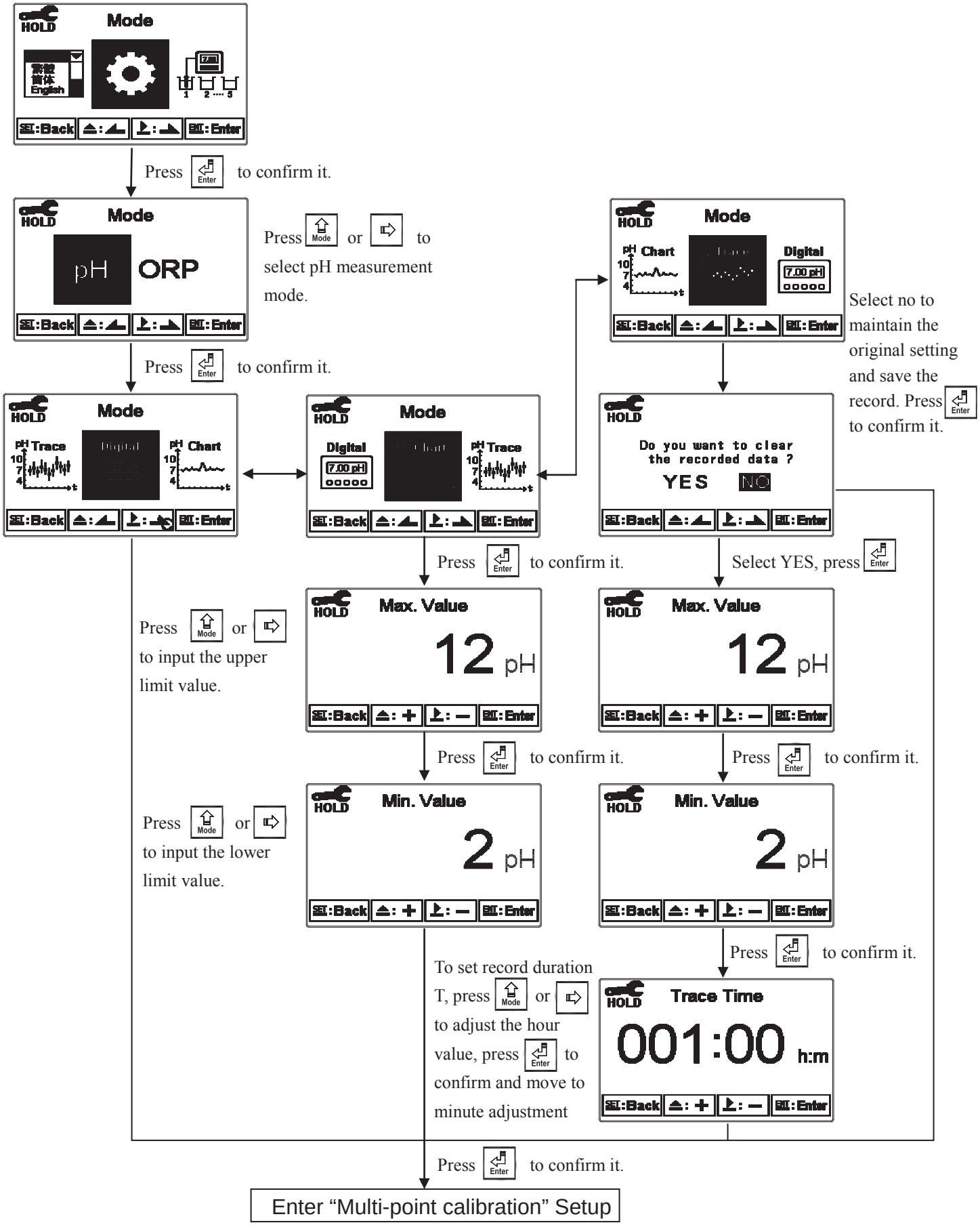

7.4.2 Enter setup of Mode, select ORP measurement mode and select the display mode.

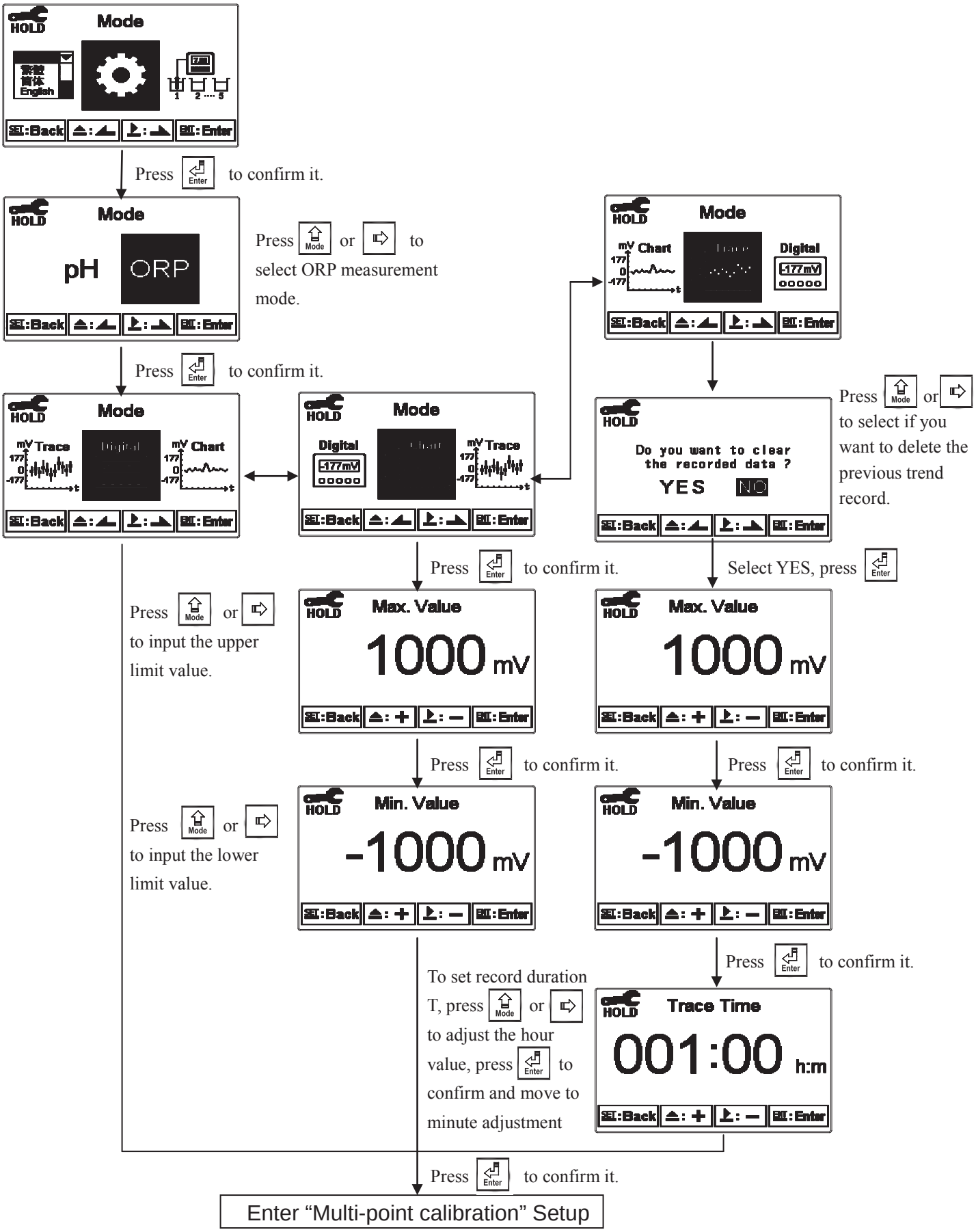

7.5 Multi-Cal

Enter setup of multi-points calibration to set the number of calibration points. The function is only for pH measurement.

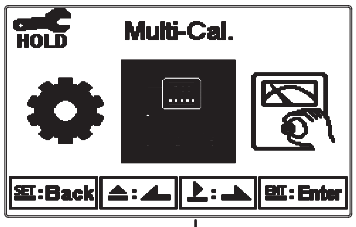

Press Enter to confirm it.

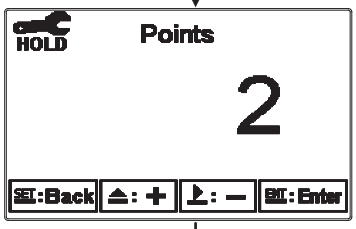

Press Mode or to select the number of calibration points. There are 1~5 points to choose from. The factory default is 2 points. When the calibration reaches the number of setting points, the calibration procedure will automatically be terminated and display the calibration result.

Press Enter to confirm it.

Enter ”Product adjustment” Setup

7.6 Product Adjustment

Enter setup of “Product Adj.”, make the sample reading modifications. Users are allowed to make sample reading adjustment without taking out the sensor and making calibration. Utilize the function to adjust the field measurement as same as the lab measurement to eliminate the doubt of measurement error. Under normal measurement display mode, there is a PDT sign on top of the pH unit. (Please see Ch 6.4)

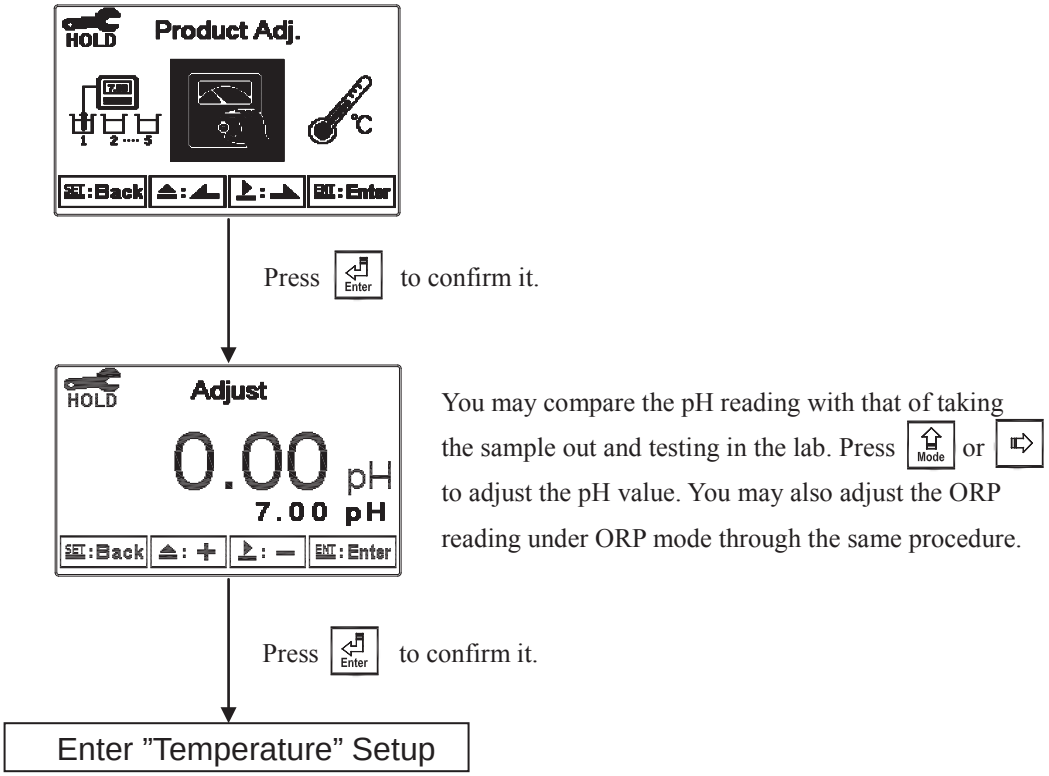

7.7 Temperature

Enter setup of “Temperature” to select temperature compensation mode. Select from NTC(NTC 30K), PTC(PT 1K) or MTC(Manual adjustment).

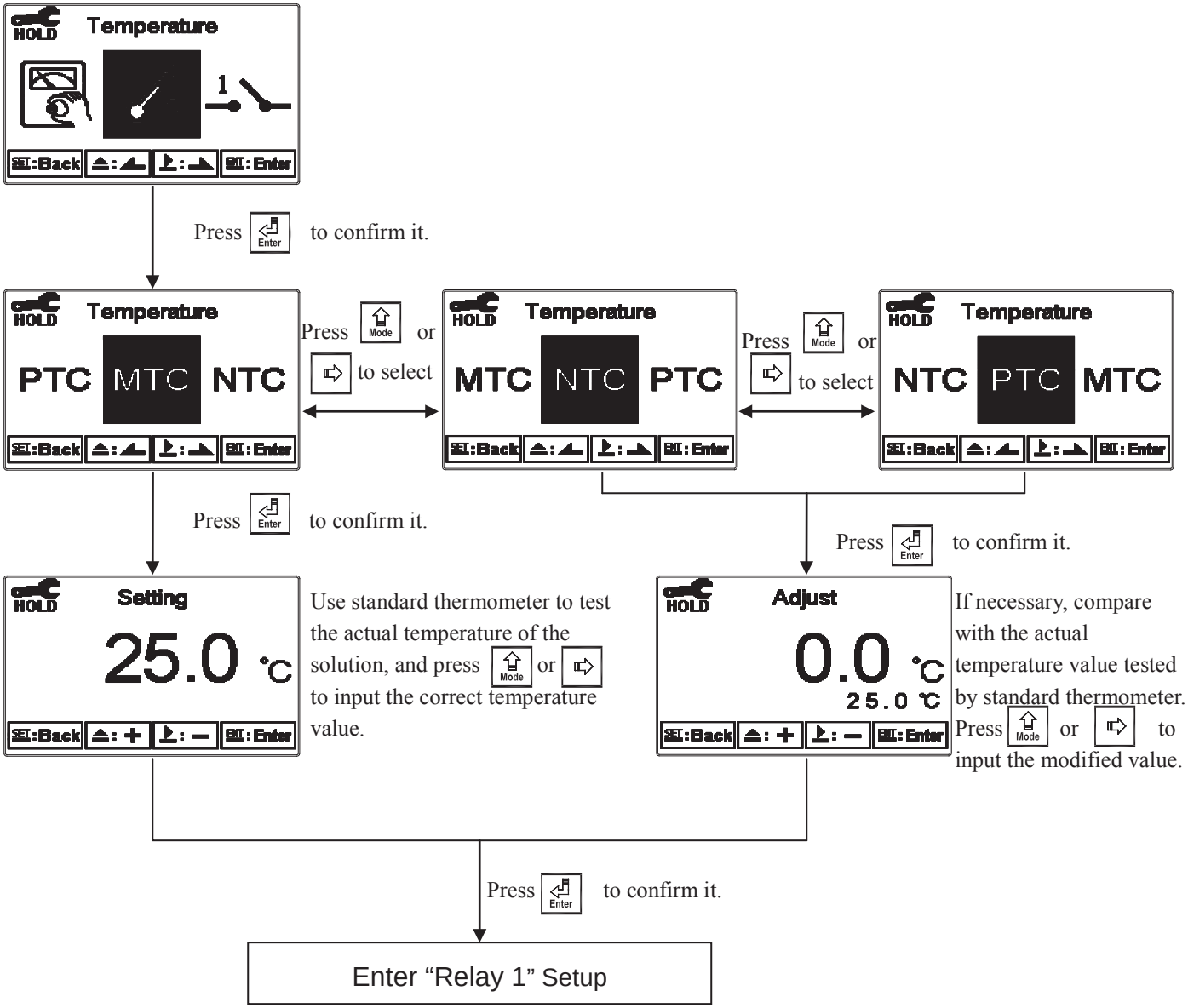

7.8 Relay 1

Enter setup of Relay 1. Select the item to turn on or turn of the relay 1 function. If you select to turn on the relay 1, then select for using relay 1 as “High set-point” alarm or “Low set-point” alarm. Set the value of set-point (SP) and Hysteresis (Hys.). The relationship between parameters can refer to an explanatory diagram of the box (as a high point alarm).

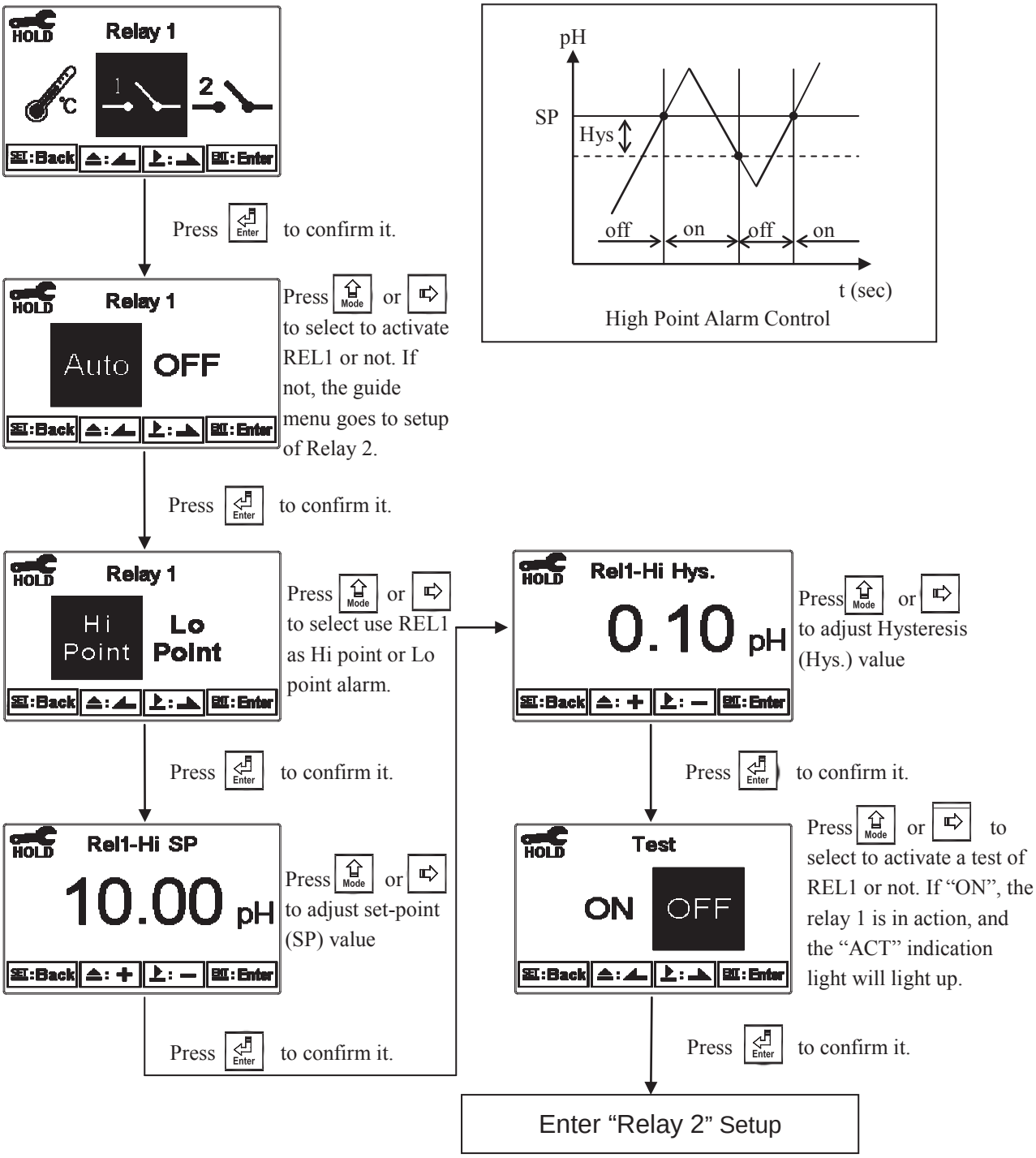

7.9 Relay 2

Enter setup of Relay 2. Select the item to turn on or turn of the relay 2 function. If you select to turn on the relay 2, then select for using relay 2 as “High set-point” alarm or “Low set-point” alarm. Set the value of set-point (SP) and Hysteresis (Hys.). The relationship between parameters can refer to an explanatory diagram of the box (as a low point alarm).

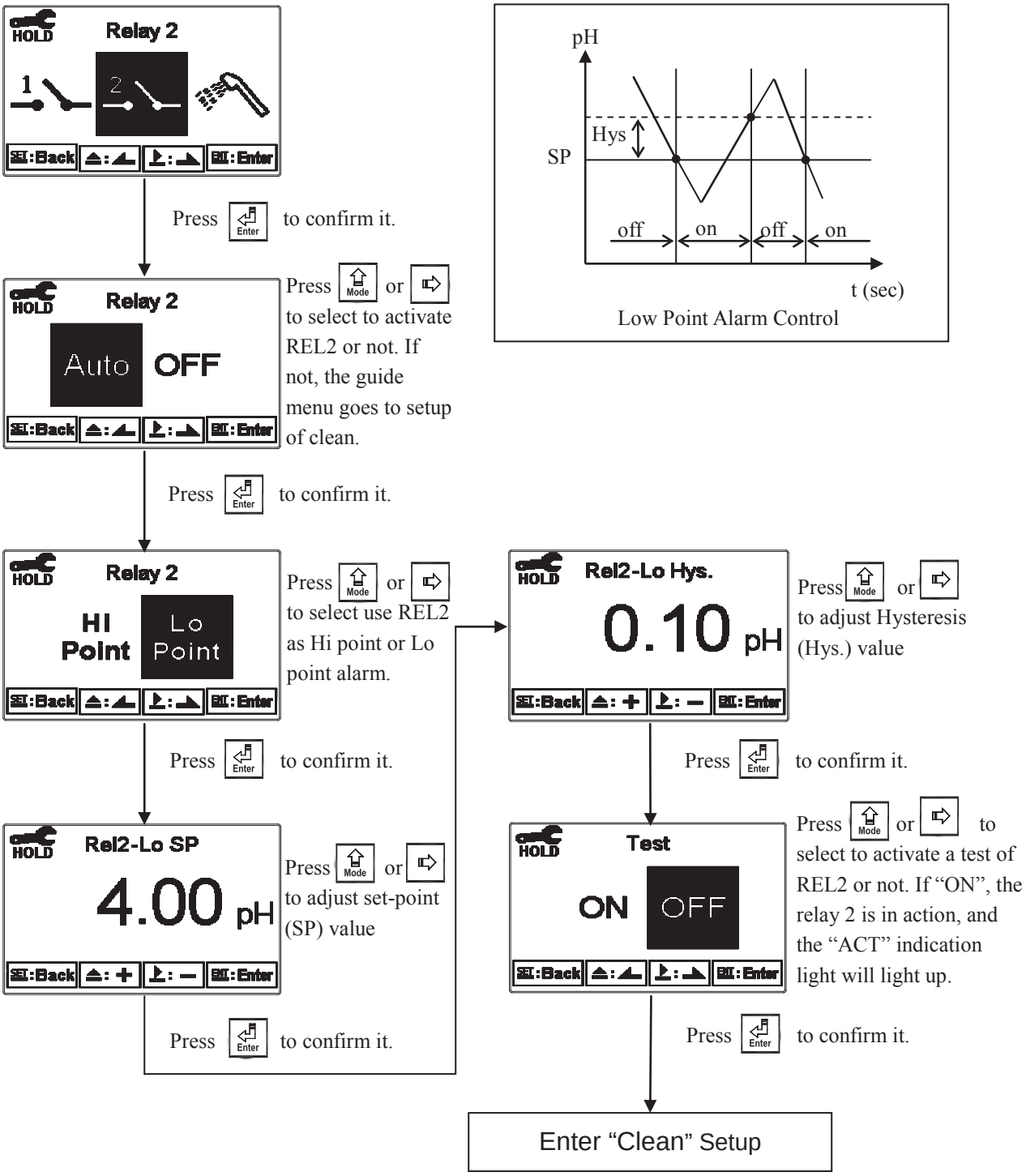

7.10 Clean

Enter setup of “Clean” function. Select the icon to turn on or turn off the clean function. If you select “Auto” turning on, then set the timer of the clean function including automatically turning on time and turning off time, and set the Hysteresis value(Hys.).

Note: When the clean function is turned on, if any value is set to be 0, the instrument will automatically turn off this function. When the clean function is activated under measurement mode, there is a “Clean Running” message showing on top of the display. The measurement value will be remained at the last measured value before cleaning. If enter setting menu or calibration menu under clean status, the instrument will stop clean status automatically.

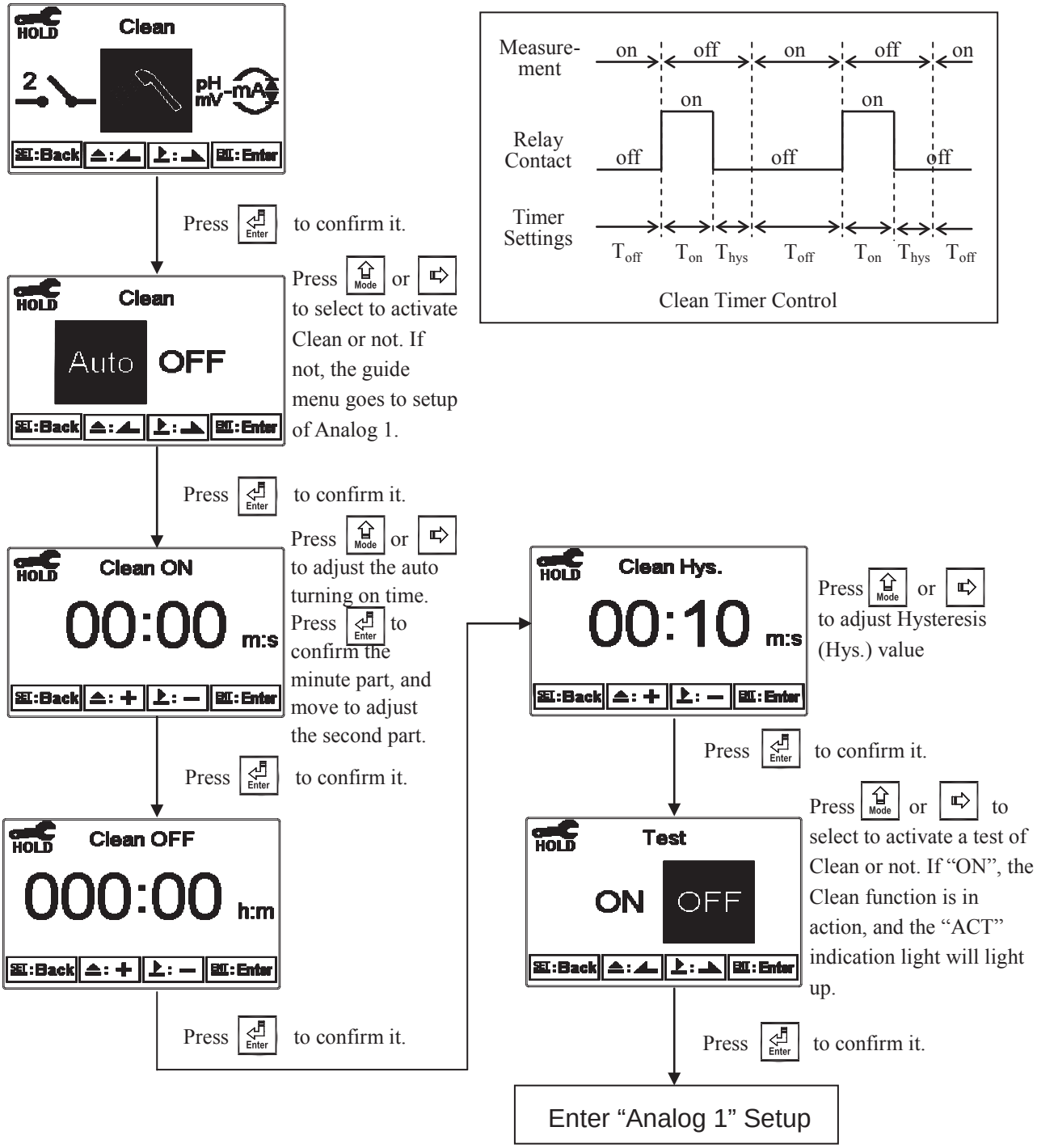

7.11 Analog output 1 (pH/ORP)

Enter setup of Analog 1. Select 0~20mA or 4~20mA current output. Set the related value to the range of pH/ORP measurement. If the range of the pH/ORP measurement is to be set smaller, the resolution of current output is higher. When the measured value exceeds the higher range limit, the current will remain approximately 22mA output. When the measured value exceeds the lower range limit, under 0~20mA mode the current output will remain 0mA output; while under 4~20mA mode the current output will remain approximately 2mA output. The exceptional output value can be used as a basis for failure determination. Under HOLD(measurement) status, the current output maintain the last output value before HOLD status. However, in order for convenience of insuring the current setting of an external recorder or of a PLC controller, the current output will be 0/4mA or 20mA under the analog output setup menu.

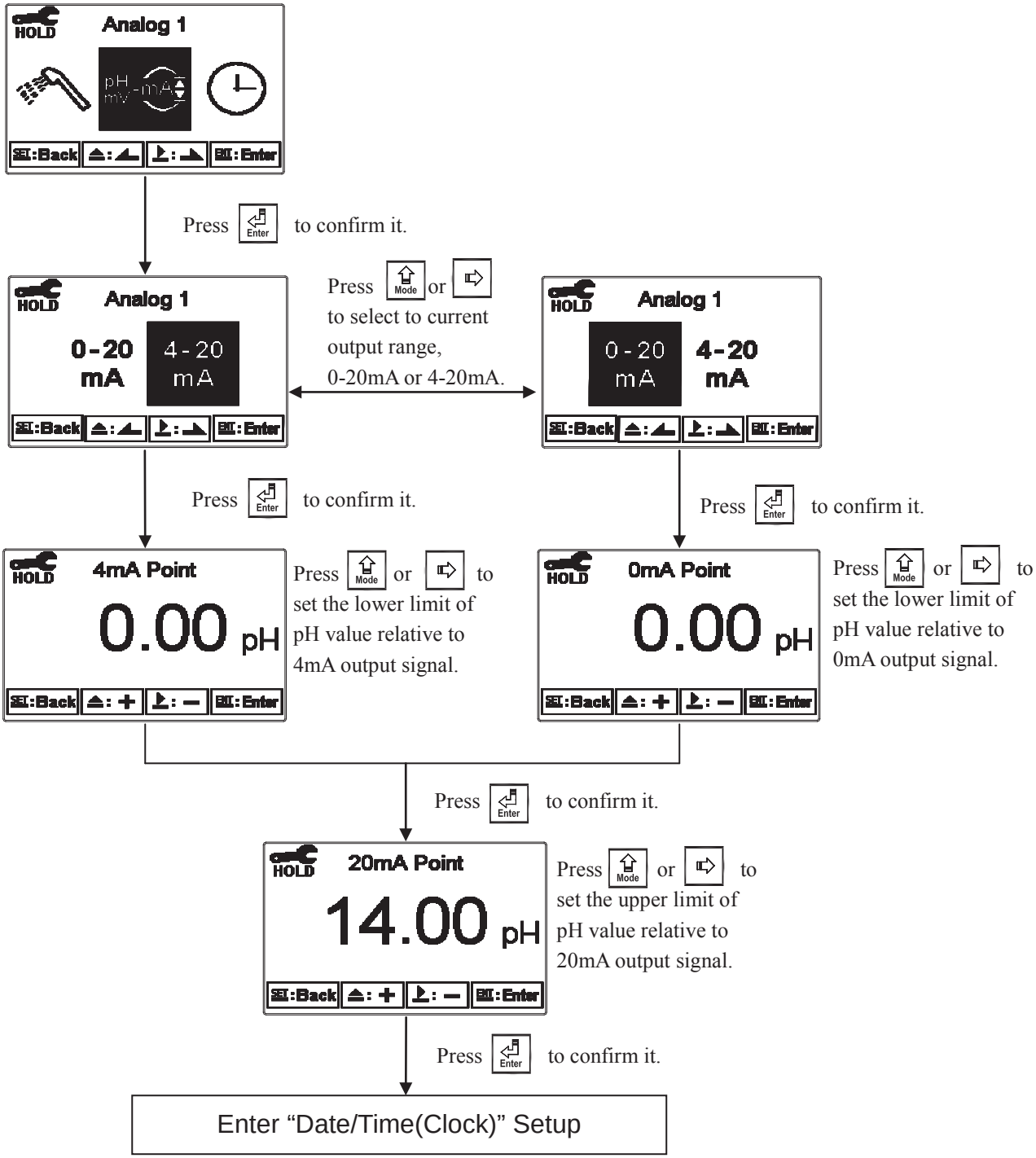

7.12 Date/Time(Clock)

Enter setup of Date/Time(Clock). Set the “Year”, “Month”, “Date”, “Hour”, and “Minute” time. Note: If you select to turn off the clock function, there will not display clock under measurement mode. The calibration time of calibration record will also show ”OFF” under calibration overview display.

Only when the inner battery is out of power, the clock may stop operation. Then, please replace the 3V CR2025 Li batter inside the transmitter.

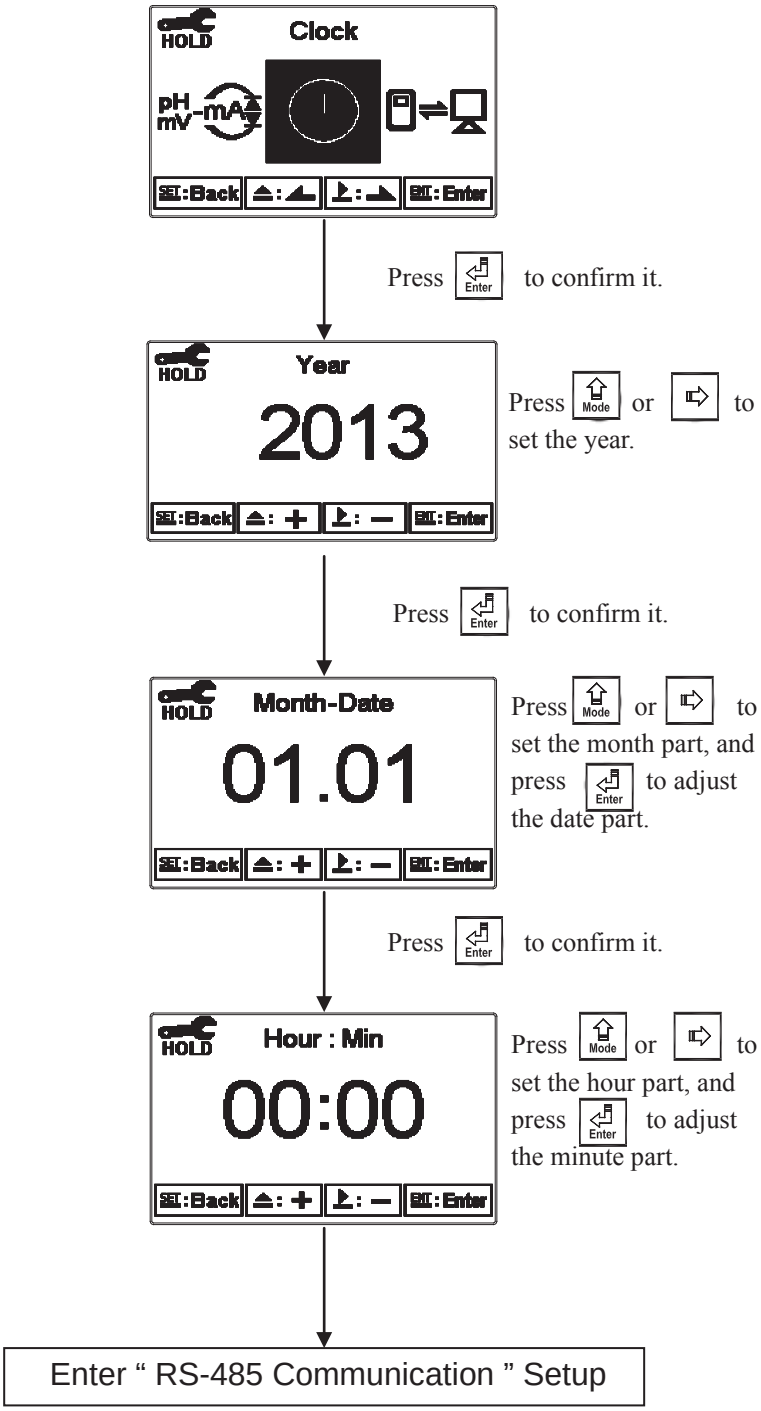

7.13 RS485 communication

Enter setup of RS485 communications. According to the Modbus protocol, set the transmitting mode, baud rate, parity, stop bits and ID number. For detail of Modbus protocol, please refer to Ch9. If under hold status, the measurement output maintains the last output value before hold status.

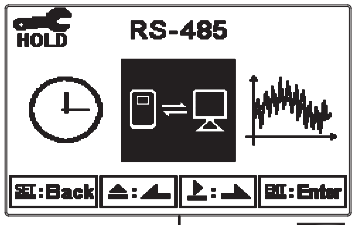

Press Enter to confirm it.

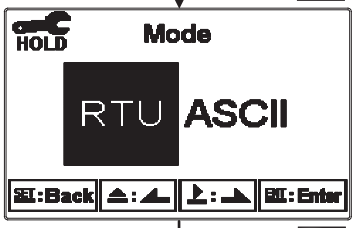

Press Mode or to select RTU or ASCII mode.

Press Enter to confirm it.

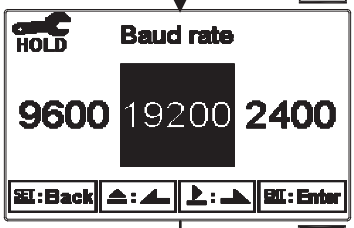

Press Mode or to select 2400, or 4800, or 9600, or 19200 for baud rate.

Press Enter to confirm it.

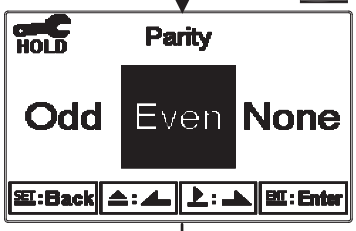

Press Mode or to select Even, or Odd, or None for parity check.

Press Enter to confirm it.

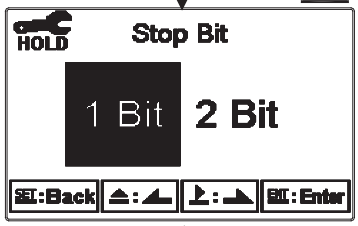

Press Mode or to select stop bit as 1 bit or 2 bit.

Press Enter to confirm it.

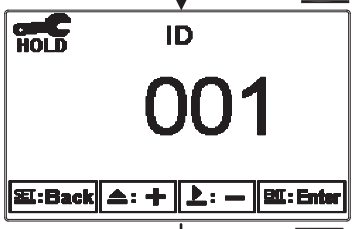

Press Mode or to set the ID number of the transmitter. The valid value is from 1 to 247.

Press Enter to confirm it.

Enter " Sample average of measurements (Digital Filter) " Setup

7.14 Sample average of measurements (Digital Filter)

Enter the setup of Digital filter. You may select the number of sample to be averaged each time to become a reading which is gradually counted in order to increase the stability of measurement.

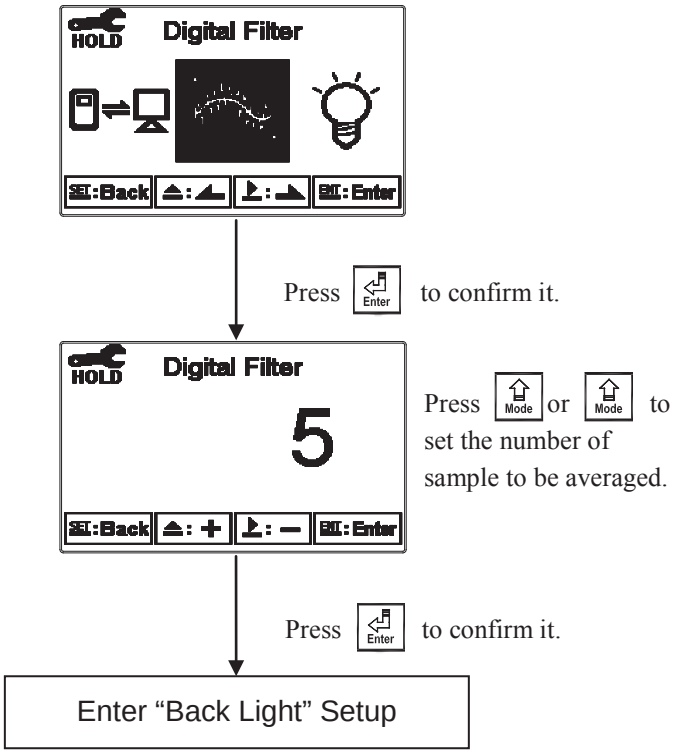

7.15 Backlight settings

Enter setup of backlight display. According to your need, you can set the brightness of display(-2~2, dark~bright) and sensitivity of the sensitization sensor(-2~2, insensitive~sensitive). Where there is a keystroke, then activate the touch-on backlight function. Regardless of what kind of backlight mode, the touch-on function will activate the backlight. If there is no keystroke for 5 seconds, the display will back to the original backlight setting status.

ON setting: The backlight is always on.
OFF setting: The backlight is off. When there is a keystroke, it enters to the touch-on status.
Auto setting: According to the ambient light, activate or deactivate the backlight. When there is a keystroke, it enters to the touch-on status.

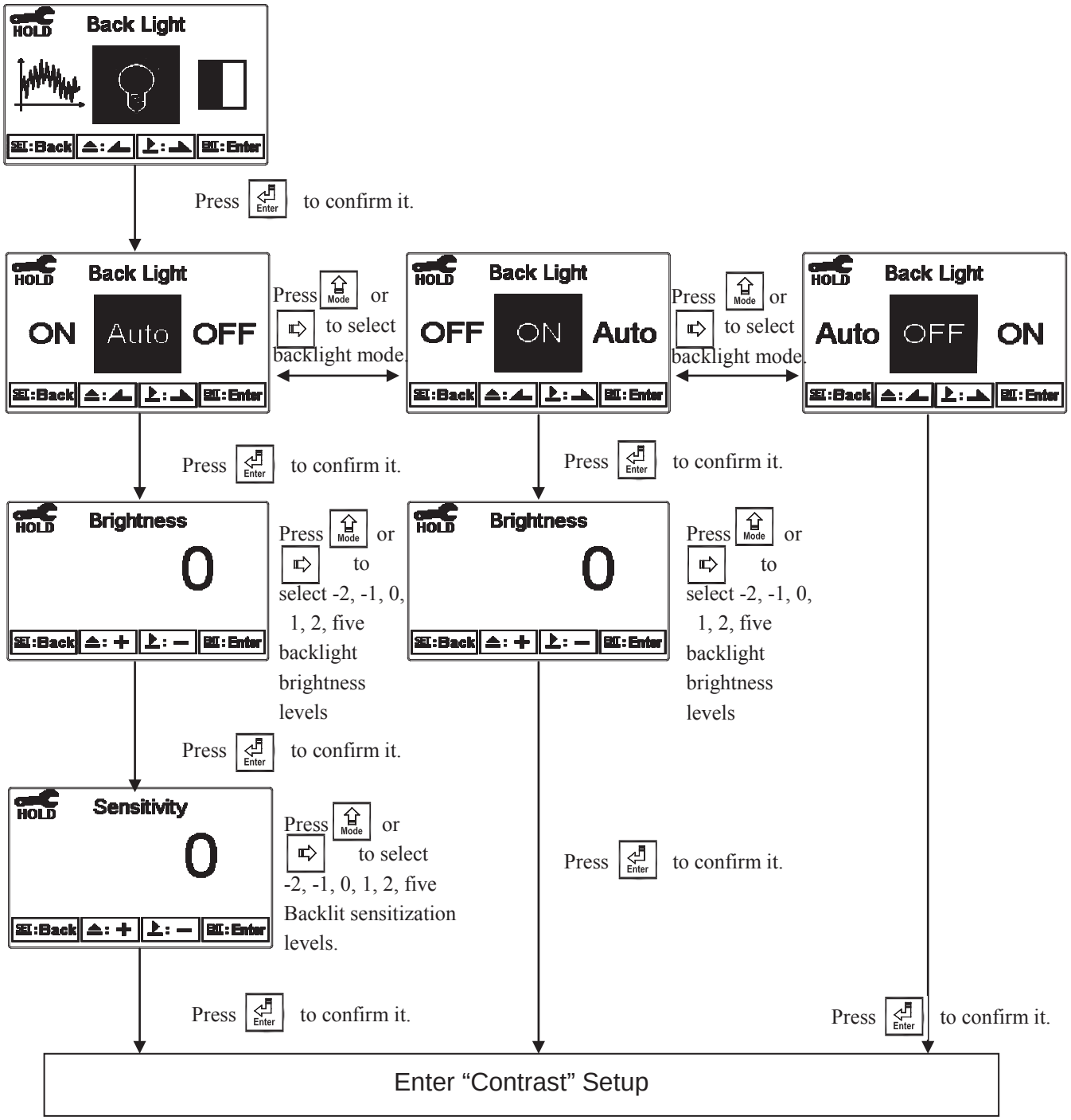

7.16 Contrast settings

Enter setup of display contrast. You can set the contrast of display according to your need. (-2, -1, 0, 1, 2, light to dark)

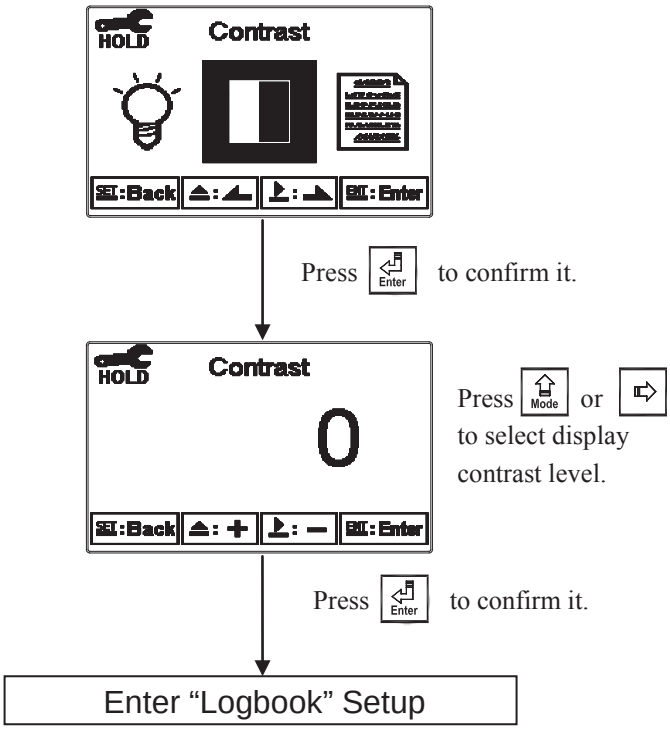

7.17 Logbook

Enter setup of Logbook. The instrument provides 50 sets of important events & error diagnostic records. Users may look up the relative records of the transmitter. Please see below table for the definition of the events. If users would like to read logbook data through Modbus, it is necessary to write in 0027H events number, and then read out 0028H~002E for corresponding events data. The No. 1 event represents the latest record, and the No.2 event represent the last record, and so o

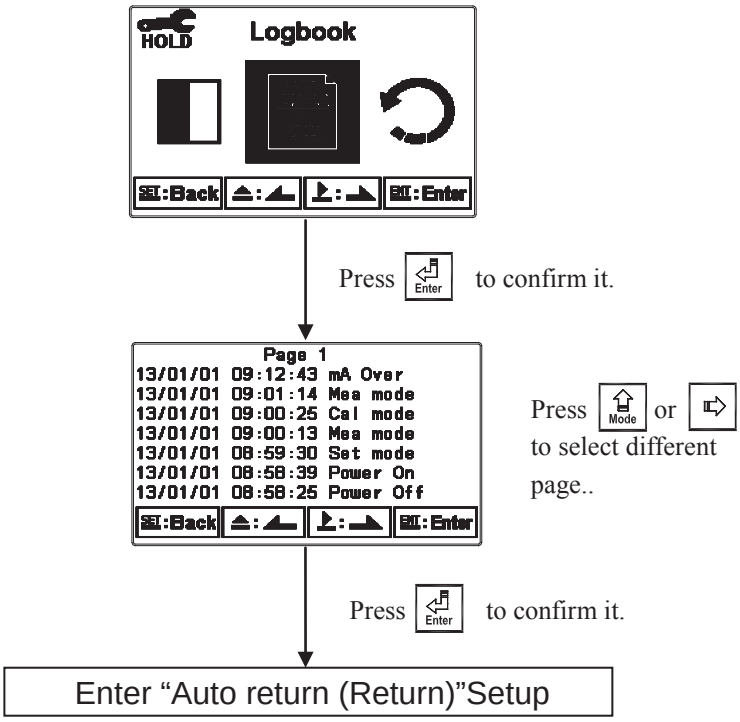

Event	Definition	Modbus code
Mea mode	Measurement mode	00
Set mode	Setting mode	01
Cal mode	Calibration mode	02
Power On	The instrument is powered on	03
Power Off	The instrument is powered off	04
mA Over	The measurement exceeds current output setting range	05
Error 1	Asy(zero-point) potential(mV) exceeds up/down limit	06
Error 2	Slope exceeds up/down limitation	07
Error 3	The measurement reading is unstable when calibration	08
Error 4	1. When calibration, the temp. of buffer exceeds 0~50°C 2.The buffer solution cannot be recognized	09
Error 5	Password input error	10
Calibration	Calibration	11
Remote Cal	Remote calibration	12
Modbus Write	Modbus write in action	13

7.18 Return

Enter setup of auto return mode (Return) to set the function that the instrument automatically exit the setup menu after a period of time without pressing any key. The “Manual Exit” means that it needs to exit setup menu manually, while “Auto” means that the display automatically exit the setup menu and back to measurement mode after a period of time without pressing any key.

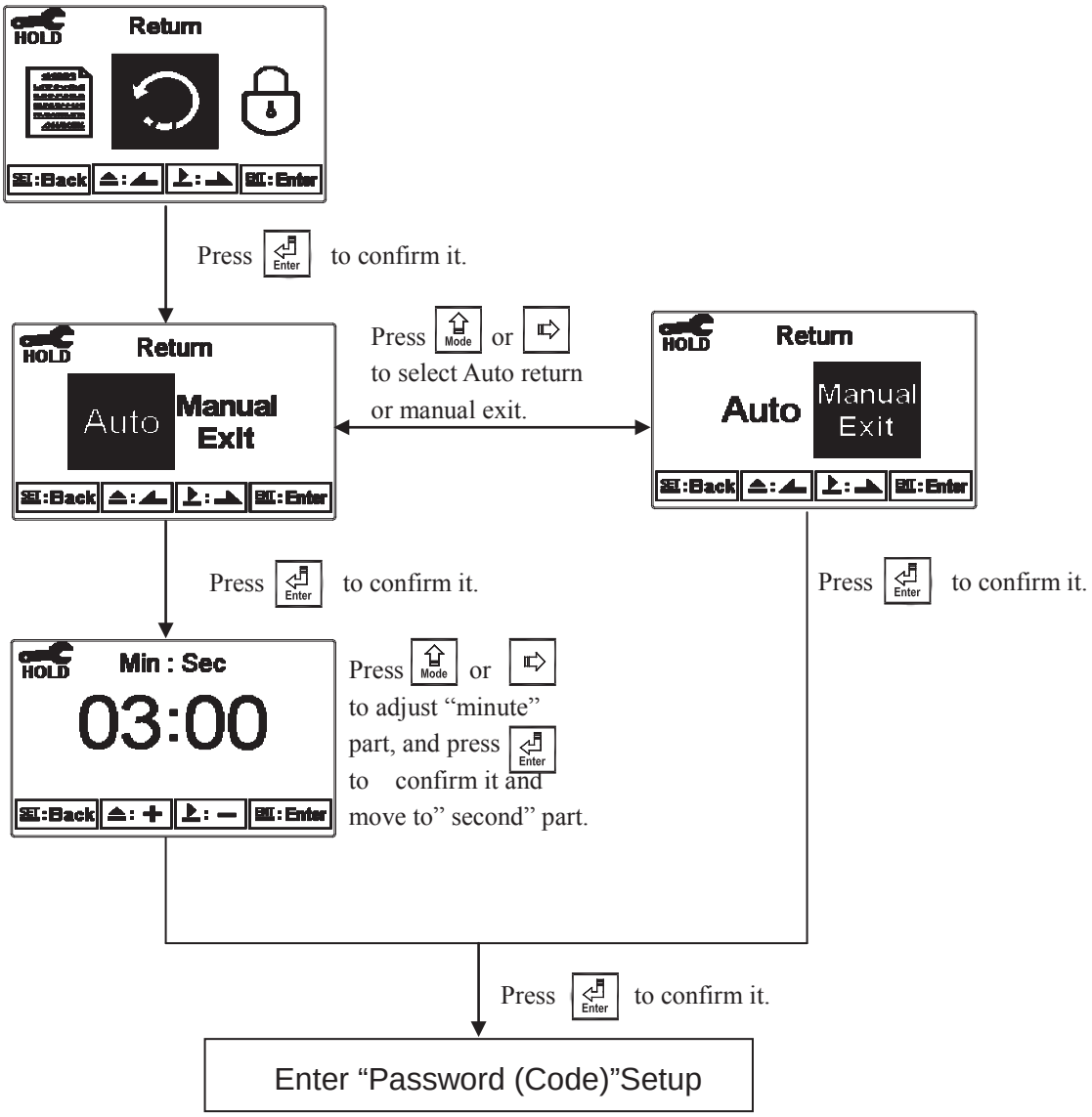

8. Calibration

Block diagram of Calibration

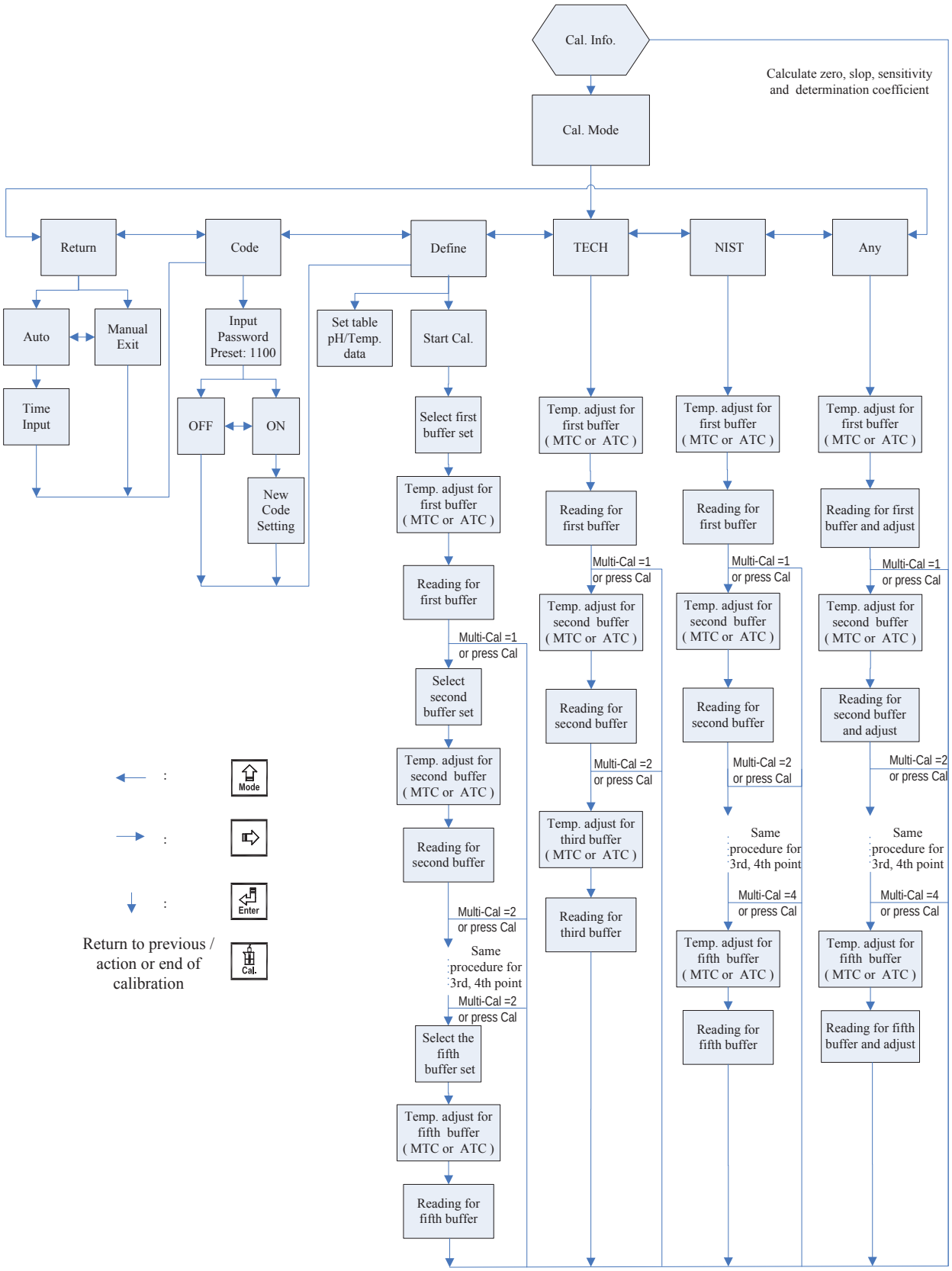

8.1 Enter calibration setup menu

In the measurement mode, pressing the two keys [Cal.] and [Mode] simultaneously allows you enter the Calibration Information. If you do not need to re-calibrate the measurement system, press [Cal.] to go back to measurement mode. If you need to re-calibrate the system, press [Enter] to enter to the calibration setup menu.

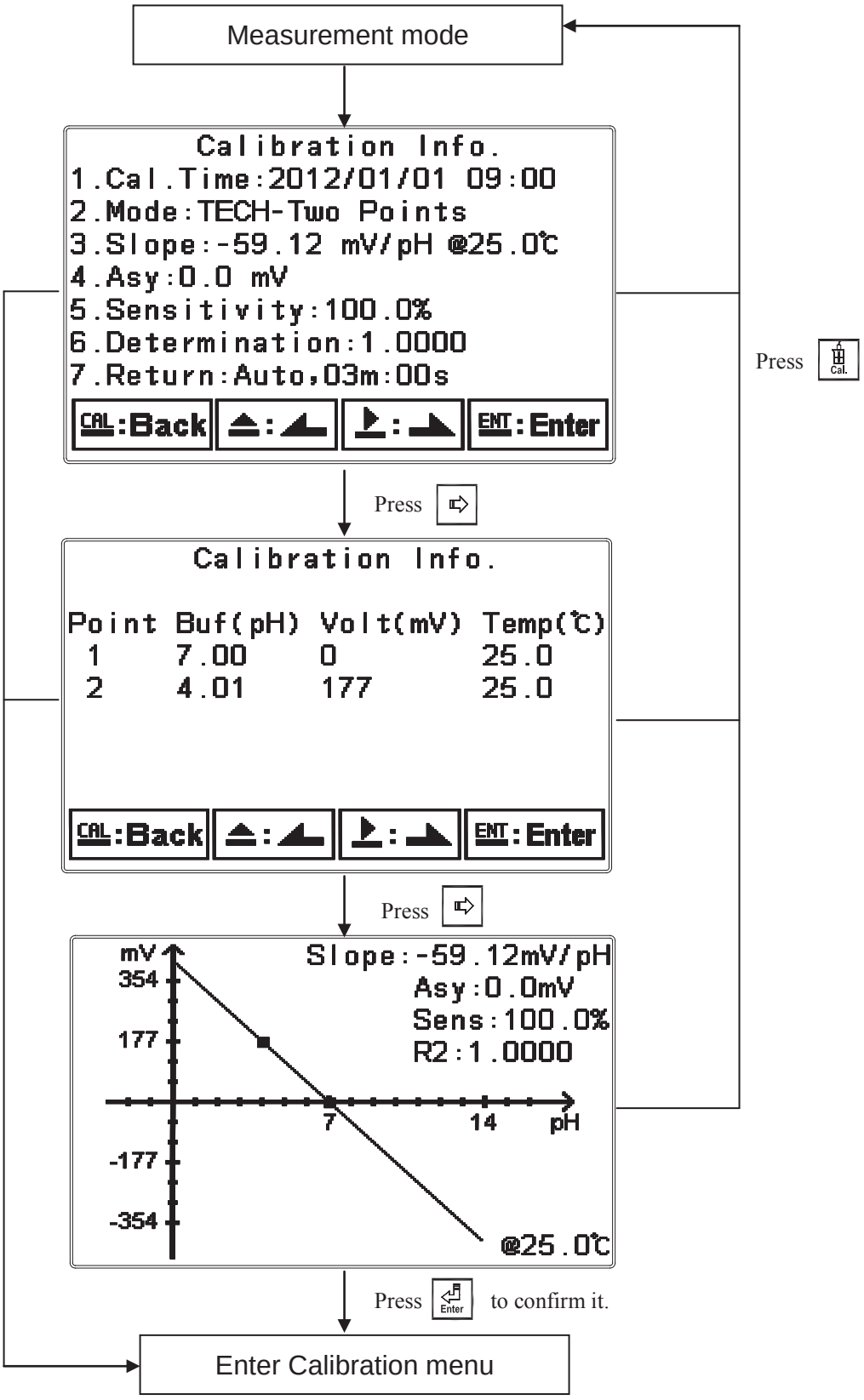

8.2 Security password of calibration (Code)

Select the Code (password) icon after entering calibration setup mode. Select to activate code function or not. **The default Calibration setting code is “1100”.**

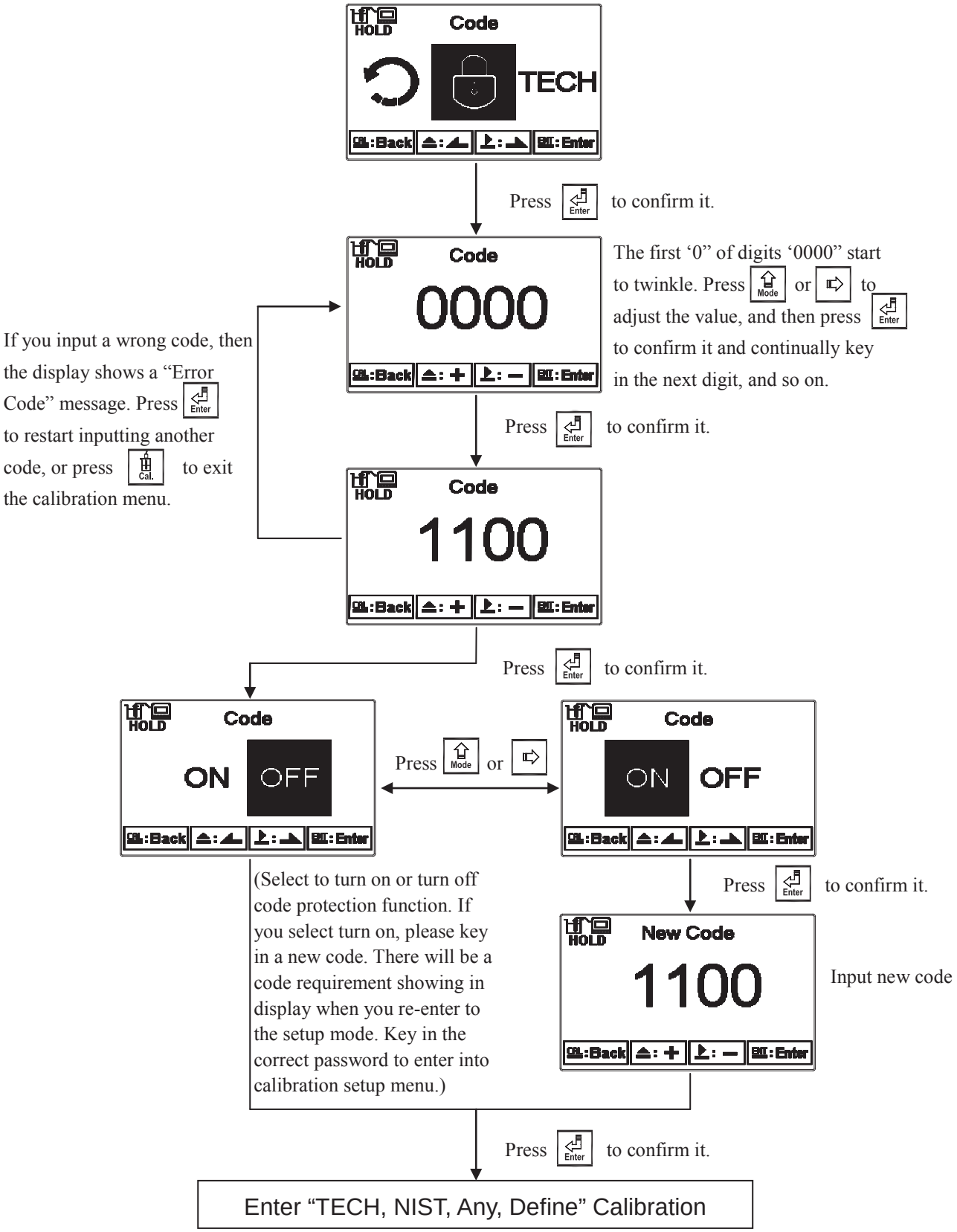

8.3 pH Calibration

The instrument provides multi-point standard buffer solution calibration. You may decide how many points to calibrate the measurement system.(PC-3310 model is up to 3-point; PC-3310RS is up to 5-point.) The principle is according to “Method of Least Squares”. Apply linear regression to calibration the electrode’s slope and zero point (Asy, Offset or Zero point).

When calibrating a electrode, you may calibrate 1 to 3 point by any sequence to provide linear regression for mV and pH multi-calibration of a electrode, and to show the electrode’s slope and zero point(Asy, offset or Zero point) at 25°C. The electrode’s slope rate which is actual slope divided by theoretical slope and the sensitivity shows in percentage in the display. In addition, the display shows the linear regression determination coefficient, R2, of the electrode and buffer solution to provide you an estimation of an electrode’s regression suitability. According to different combination of standard buffers, the TECH, NIST, Any buffer solution calibration modes are provided.

8.3.1 TECH mode (up to 3-point calibration)

The electrode is automatically calibrated according to pH value and temperature of TECH standard buffers (pH4.01, pH7.00, pH10.00). The range of zero point and slope of the electrode is also determined. If one of them is over the range, the display shows error message of zero point and slope failure. (See appendix Table 1, pH/temperature table of TECH standard buffers)

8.3.2 NIST mode

The electrode is automatically calibrated according to pH value and temperature of NIST standard buffers.(pH1.68, pH4.01, pH6.86, pH9.18, pH 12.45). The range of zero point and slope of the electrode is also determined. If one of them is over the range, the display shows error message of zero point and slope failure. (See appendix Table 2, pH/temperature table of NIST standard buffers)

8.3.3 Any mode

The electrode measures mV value of different standard solutions. According to theoretic slope and the temperature of standard solutions, the display shows a approximate pH value. Then, you can calibrate the electrode by freely adjust the pH value as those of the standard solutions’. There is not a zero point range failure determination by the instrument but only the slope range determination. If the slope is over the range, the display shows error message of slope failure.

8.3.4 Define mode

There is a factory default 5 buffer standard solutions pH/temperature table which may be modified and saved by users. When users have their own buffer solutions, they may create or modify the data sheet and then save it in the memory of transmitter. Under this calibration mode, the sensor does not do the zero-point calibration and slope range determination. (See appendix Table 3, pH/temperature table of define(built-in) standard buffers.)

8.3.5 Definition of calibration parameter

You can calibrate the electrode by one point or up to three points of standard solutions by any sequence. As different calibration point method is applied, the definition of the zero point and slope different.

Calibration point	Determination	The showed calibration value
One point calibration	Asy	Zero point (Asy, offset or Zero point)= Asy 1.If not calibrated, Slope = Theoretical slope 2.If calibrated, Slope = Slope of last calibration
Two or three point calibration	Asy Slope	Zero point (Asy, offset or Zero point)= Asy Slope = Slope* Note: To obtain a new zero point(Asy) and Slope by applying linear regression.

8.3.6 TECH, NIST buffer Calibration

The procedure below is two points calibration of TECH buffer. (The procedure is same as NIST buffer mode.) First, enter the setup of Multi-points calibration and set the number of calibration point for 2. (See chapter 7.5 Multi-Cal) Then, go to Calibration menu and select TECH mode. Operate the instrument as follow procedure diagram. For multi points calibration, it also needs to set the number of points in the Multi-Cal setting in advance, and the calibration procedure is the same.

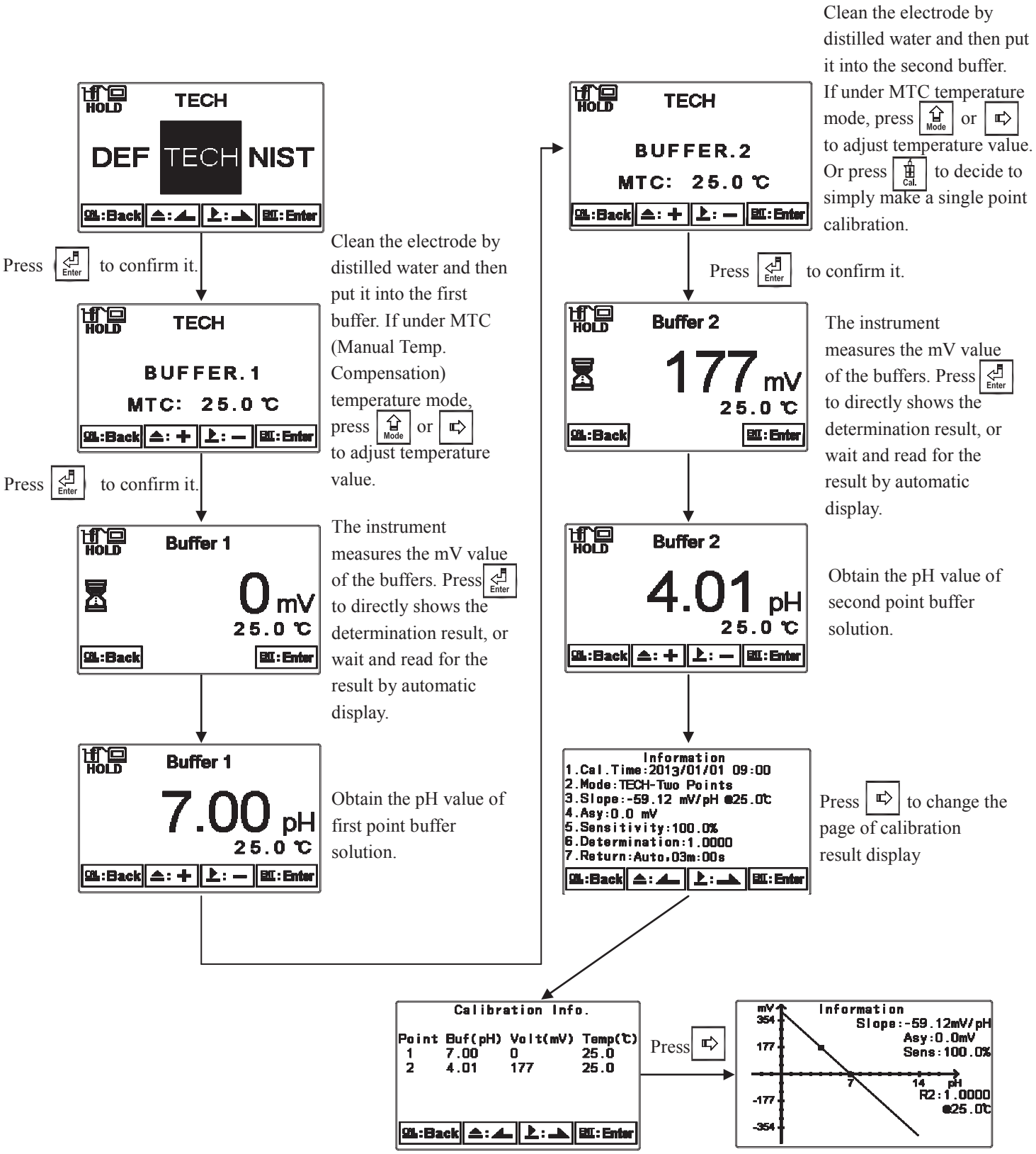

8.3.7 Any Calibration

The procedure below is two points calibration of Any mode. First, enter the setup of Multi-points calibration and set the number of calibration point for 2. (See chapter 7.5 Multi-Cal) Then, go to Calibration menu and select “Any” mode. Operate the instrument as follow procedure diagram. . For multi points calibration, it also needs to set the number of points in the Multi-Cal setting in advance, and the calibration procedure is the same.

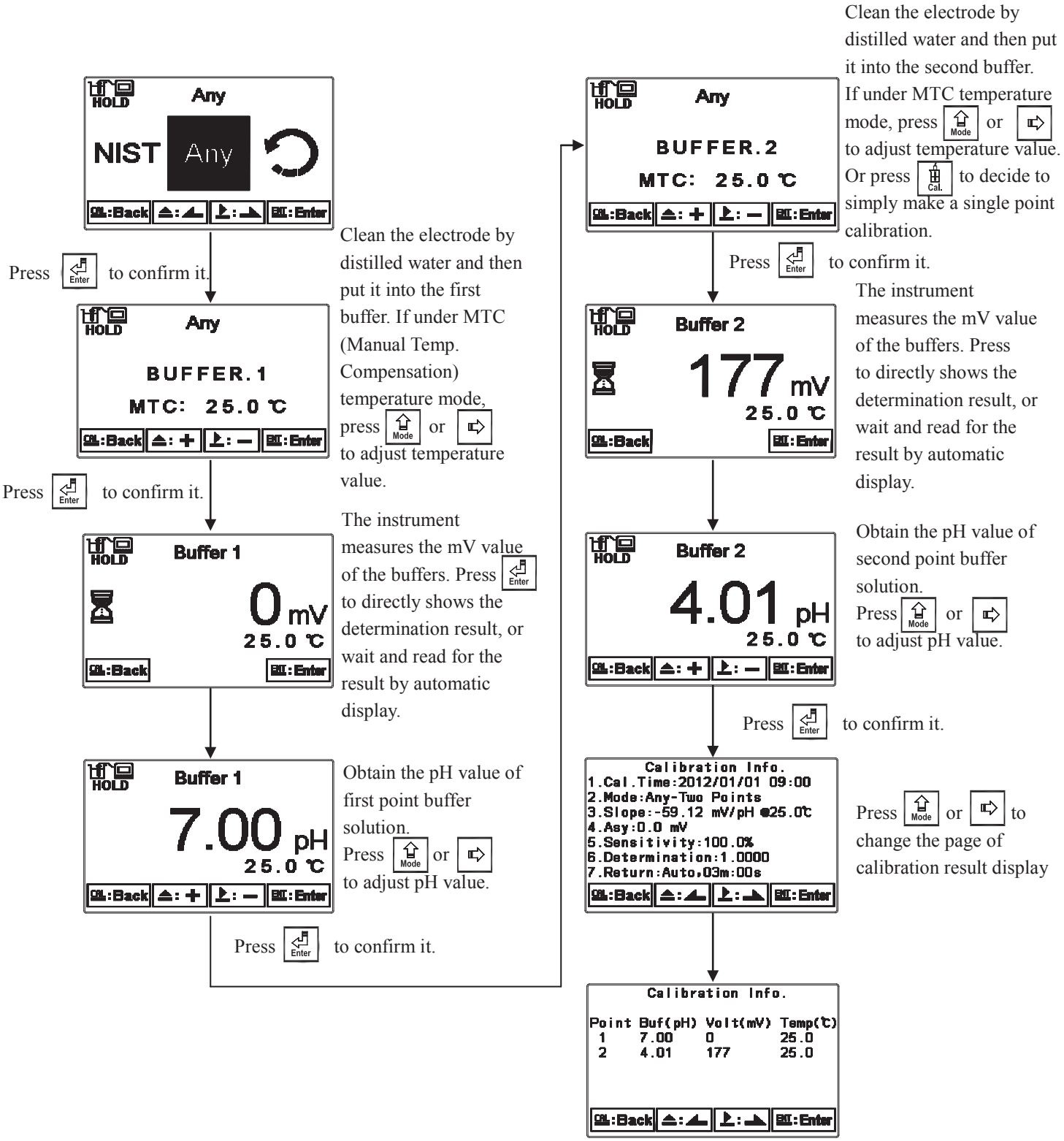

8.3.8 Define calibration

Define mode has pre-set 5 buffer solution pH/Temperature table. Users may modify the data sheet according to the buffer solutions set they use. The table can be modified and saved in the memory of the transmitter.

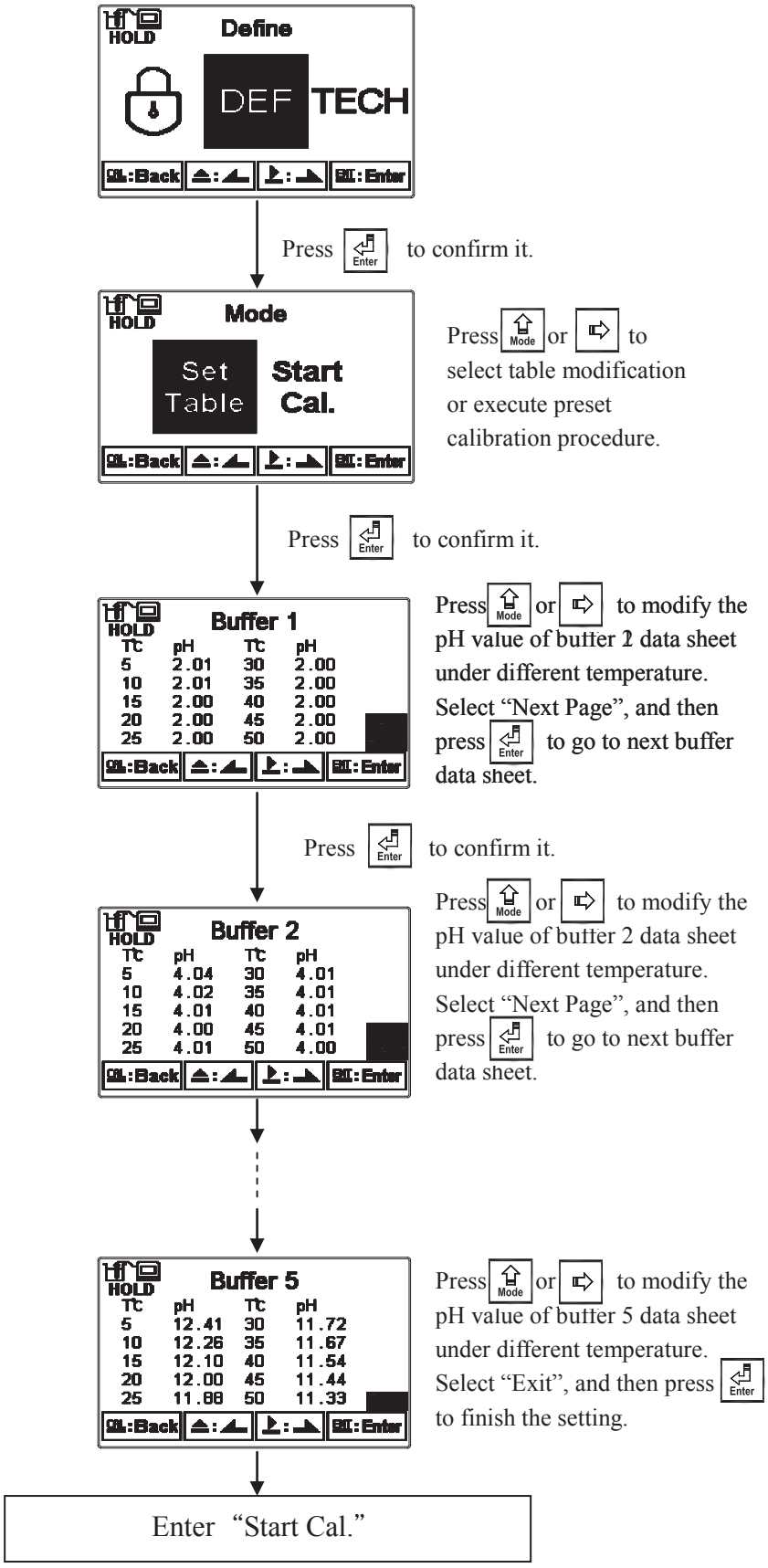

The procedure below is two points calibration of Define mode. First, enter the setup of Multi-points calibration and set the number of calibration point for 2. (See chapter 7.5 Multi-Cal) Then, go to Calibration menu and select “Define” mode.

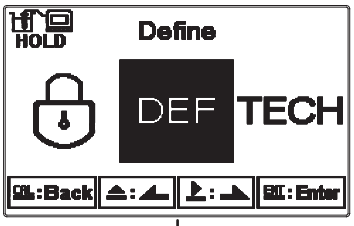

Press Enter to confirm it.

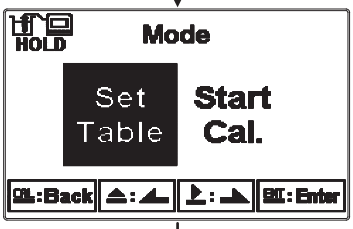

Press Mode or ⇨ to select starting of calibration and execute preset calibration

Press Enter to confirm it.

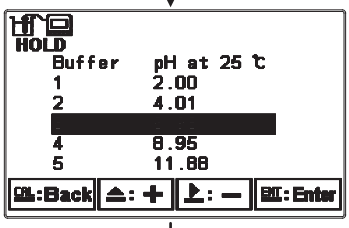

Press Mode or ⇨ to select the first point buffer solution.

Press Enter to confirm it.

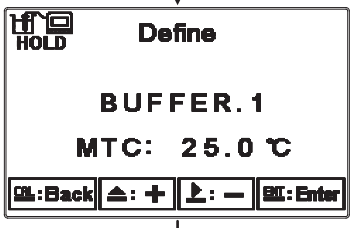

Clean the electrode by distilled water and then put it into the first buffer. If under MTC (Manual Temp. Compensation) temperature mode, press Mode or ⇨ to adjust temperature value.

Press Enter to confirm it.

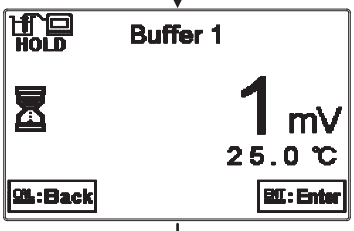

The instrument measures the mV value of the buffers. Press Enter to directly shows the determination result, or wait and read for the result by automatic display.

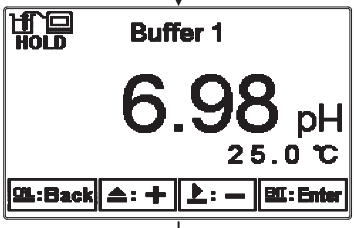

Obtain the pH value of first point buffer solution.

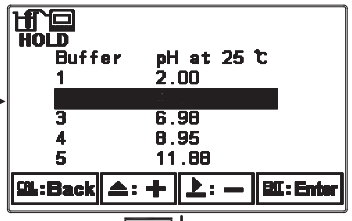

Press Mode or ⇨ to select the second point buffer solution.

Press Enter to confirm it.

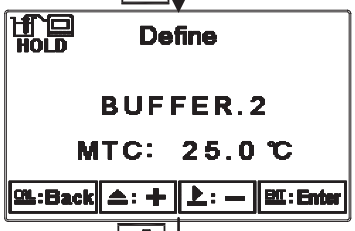

Clean the electrode by distilled water and then put it into the second buffer. If under MTC temperature mode, press Mode or ⇨ to adjust temperature value. Or press CaL to decide to simply make a single point calibration.

Press Enter to confirm it.

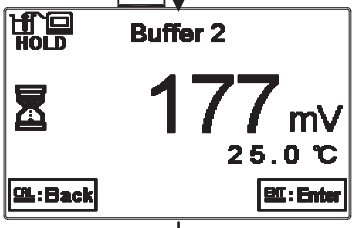

The instrument measures the mV value of the buffers. Press Enter to directly shows the determination result, or wait and read for the result by automatic display.

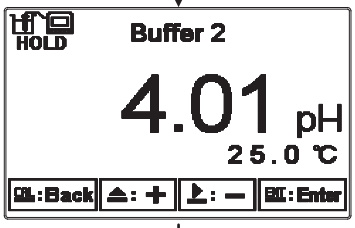

Obtain the pH value of second point buffer solution.

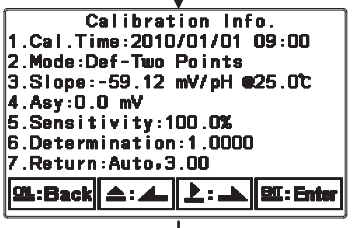

Press Mode or ⇨ to change the page of calibration result display

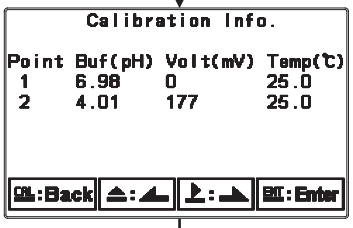

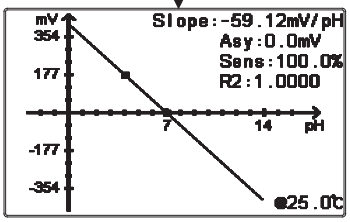

8.3.9 Remote pH calibration(TECH、NIST Only)

Users can make remote pH calibrations through Modbus based on settings of parameters and calibration mode, and then the control of pipeline system of calibration is activated by remote master machine, and then the transmitter receives the signals transferred through Modbus. If calibration mode is not set in TECH or NIST mode, the transmitter will receive the remote calibration order to choose TECH mode for calibration automatically. Users may build up pipeline system including standard buffer solutions and washing fluids, and then follow the procedures of logical address of Modbus below to make remote pH calibrations. The detail order of master machine and response of slave machine are as follows.

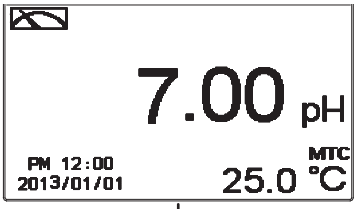

Logical Address	Bit
0080H	0
0081H	0
0082H	0
0083H	0

Master inputs 0080H=1
Slave sets 0081H=1

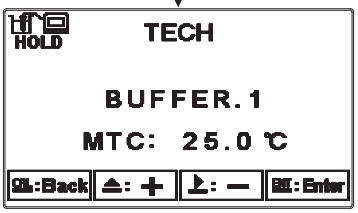

Logical Address	Bit
0080H	1
0081H	1
0082H	0
0083H	0

Master reads 0081H=1 to activate pipeline control.

Master inputs 0082H=1
Slave sets 0081H=0

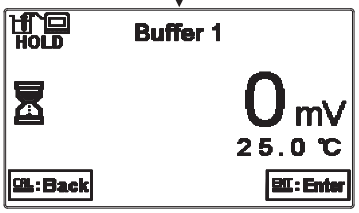

Logical Address	Bit
0080H	1
0081H	0
0082H	1
0083H	0

The Slave reads 0082H=1to start calibration.

Master inputs 0083H=1
Compulsory read of Slave
Or Master reads automatically

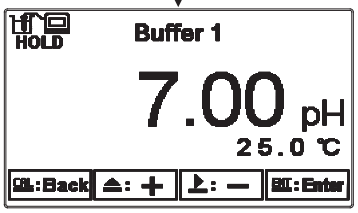

Logical Address	Bit
0080H	1
0081H	0
0082H	1
0083H	0

Finish first point calibration
The Slave setting is 0081H=1
and 0082H=0

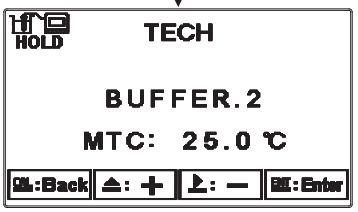

Logical Address	Bit
0080H	1
0081H	1
0082H	0
0083H	0

Master reads 0081H=1 to activate pipeline control

Finish entering buffer
Master inputs 0082H=1
Slave sets 0081H=0

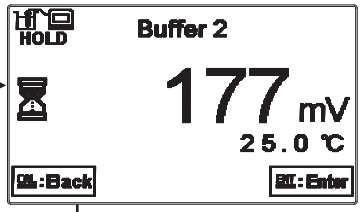

Logical Address	Bit
0080H	1
0081H	0
0082H	1
0083H	0

Master inputs 0083H=1
Compulsory read of Slave
Or Master reads automatically

The Slave reads 0082H=1 to start calibration.

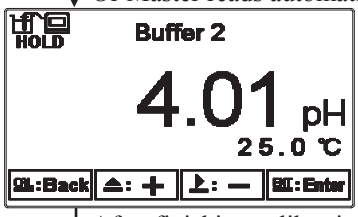

Logical Address	Bit
0080H	1
0081H	0
0082H	1
0083H	0

After finishing calibration, the Slave sets 0080H、0081H、0082H and 0083H to 0, and then goes back to measurement mode.

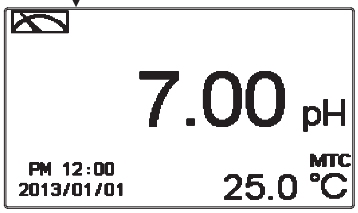

Logical Address	Bit
0080H	0
0081H	0
0082H	0
0083H	0

Master reads 0080H=0, which presents ending of calibration.

Logical address	description
0080H	The master informs the slave to make a remote calibration.
0081H	The slave allows the master to activate pipeline control.
0082H	The master informs the slave to finish dose-feeding of standard buffer solutions.
0083H	The master enforces the slave to read results directly.
0084H	The master enforces the slave to end up calibration.
0085H	Error calibration

Note 1: If the calibration appears error, the Slave will go back to measuring mode and set 0080H~0084H to 0 and 0085H to 1. As it restarts calibration, reset 0085H to 0.

Note 2: The Master writes 0084H as 1 to end up calibration compulsorily, and the Slave makes the calibrated data put into calculations.

Remote pH calibration host order and response of the terminal (take RTU for example)		
Calibration steps	**Host order**	**Terminal response**
Read 0080H~0085H on the measurement mode	01 01 00 80 00 06 BD E0	01 01 01 00 51 88
Enter into first point calibration	01 05 00 80 FF 00 8D D2	01 05 00 80 FF 00 8D D2
Read 0080H~0085H	01 01 00 80 00 06 BD E0	01 01 01 03 11 89
Start first point calibration	01 05 00 82 FF 00 2C 12	01 05 00 82 FF 00 2C 12
Read 0080H~0085H	01 01 00 80 00 06 BD E0	01 01 01 05 91 8B
Enter automatically into second point calibration	x	x
Read 0080H~0085H	01 01 00 80 00 06 BD E0	01 01 01 03 11 89
Start second point calibration	01 05 00 82 FF 00 2C 12	01 05 00 82 FF 00 2C 12
Read 0080H~0085H	01 01 00 80 00 06 BD E0	01 01 01 05 91 8B
Enter automatically into third point calibration	x	x
Read 0080H~0085H	01 01 00 80 00 06 BD E0	01 01 01 03 11 89
The third point ~ the fifth point…..etc		
End up calibration and go back to measurement mode automatically	x	x
Read 0080H~0085H on the measurement mode	01 01 00 80 00 06 BD E0	01 01 01 00 51 88

The other (take RTU for example)		
Situations descriptions	**Host order**	**Terminal response**
Error appears during measurement(0085H=1), and the host is going to re-start calibration.	01 05 00 80 FF 00 8D D2	01 05 00 80 FF 00 8D D2
The host enforces the terminal to read the results directly.	01 05 00 83 FF 00 7D D2	01 05 00 83 FF 00 7D D2
End up calibration and go back to measurement mode.	01 05 00 84 FF 00 CC 13	01 05 00 84 FF 00 CC 13
Read calibrated information.	01 03 00 40 00 0D 85 DB	Depend on the response of real calibrated data
Remote adjustment of the samples' reading value. Take adjusting 0.2 pH for example.	01 10 00 25 00 02 04 CC CD 3E 4C 8E B2	01 10 00 25 00 02 50 03

Note: the last two codes are CRC check codes.

8.4 ORP Calibration

Under ORP measurement mode, enter calibration setup menu. Select Calibration icon, and adjust mV value. The adjustable range is from -300mV to 300mV.

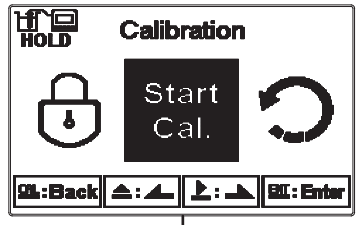

Press  to confirm it.

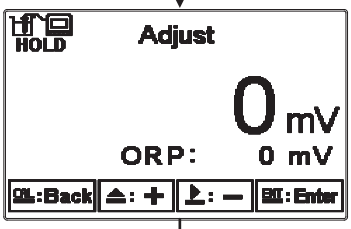

Put the ORP electrode into ORP standard solution. Press  or 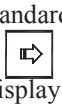 to adjust the main display value until it is equal to the desired mV value.

Press  to confirm it.

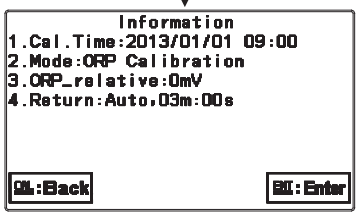

8.5 Return

Enter setup of auto return mode (Return) to set the function that the instrument automatically exit the setup menu after a period of time without pressing any key. The “Manual Exit” means that it needs to exit calibration setup menu manually, while “Auto” means that the display automatically exit the calibration setup menu and back to measurement mode after a period of time without pressing any key.

Note: The return function of setup menu and calibration setup menu are independent settings.

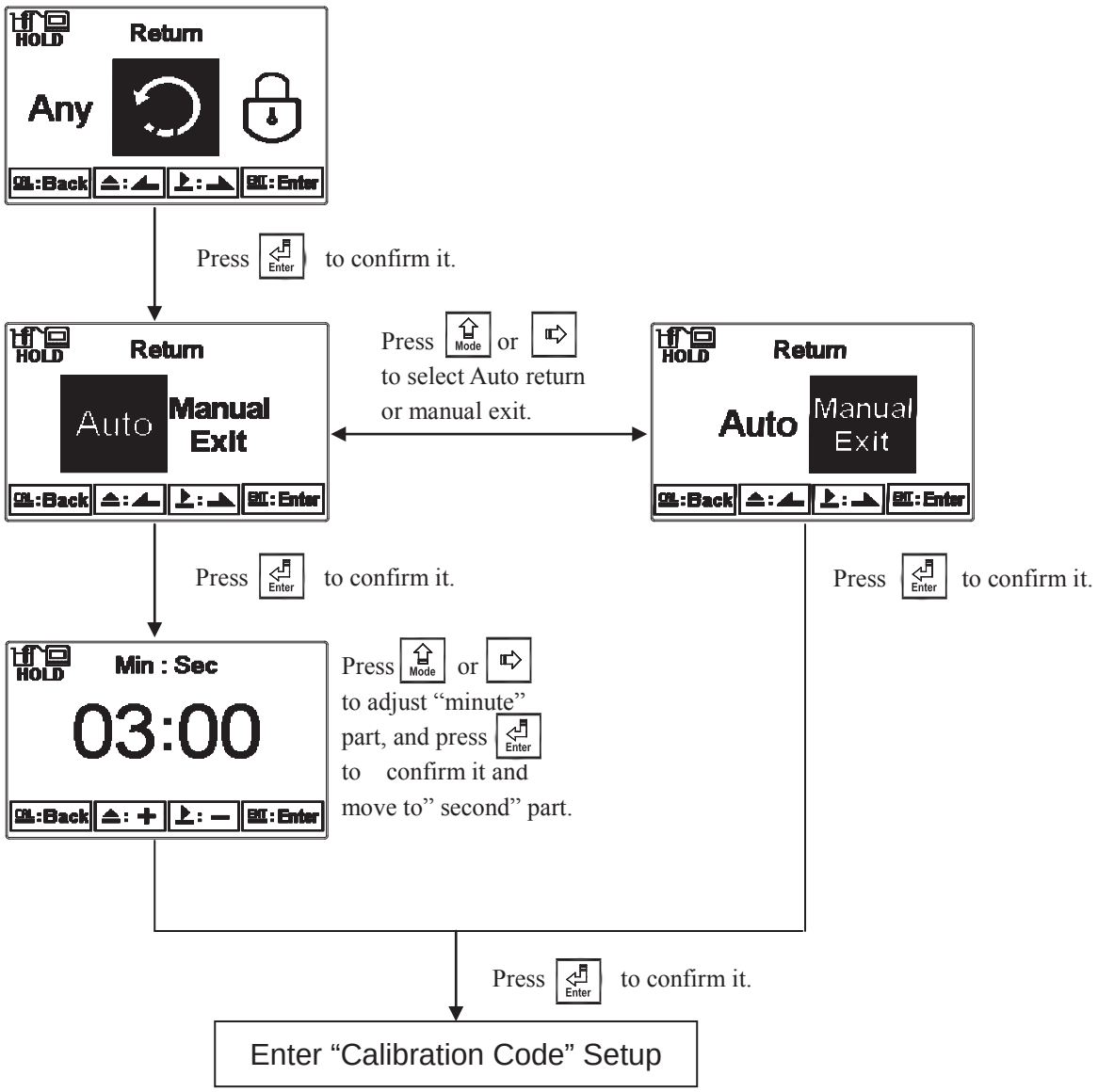

9. MODBUS protocol and instructions

9.1 Communication connection

The RS-485 communication port of the transmitter features electronic isolation protection and lightning protection, and it provides isolated ground solution. It is allowed to use normal twisted-pair (segregation double-stranded twisted pair cable) cable for connection. All devices are in contact with a positive connecting point D+(B) of the double-stranded twisted-pair cable all together, and another line will be connected with all the negative contacts D-(A), and the isolated shield wire must be connected to ground(GND). When we talk about communication in the laboratory, the stand-alone master-slave communication is relatively simple. Hence, it is allowed to consider using the normal cable instead. However, there should be strictly in accordance with the requirements of industrial engineering construction. Wiring diagram is as follows:

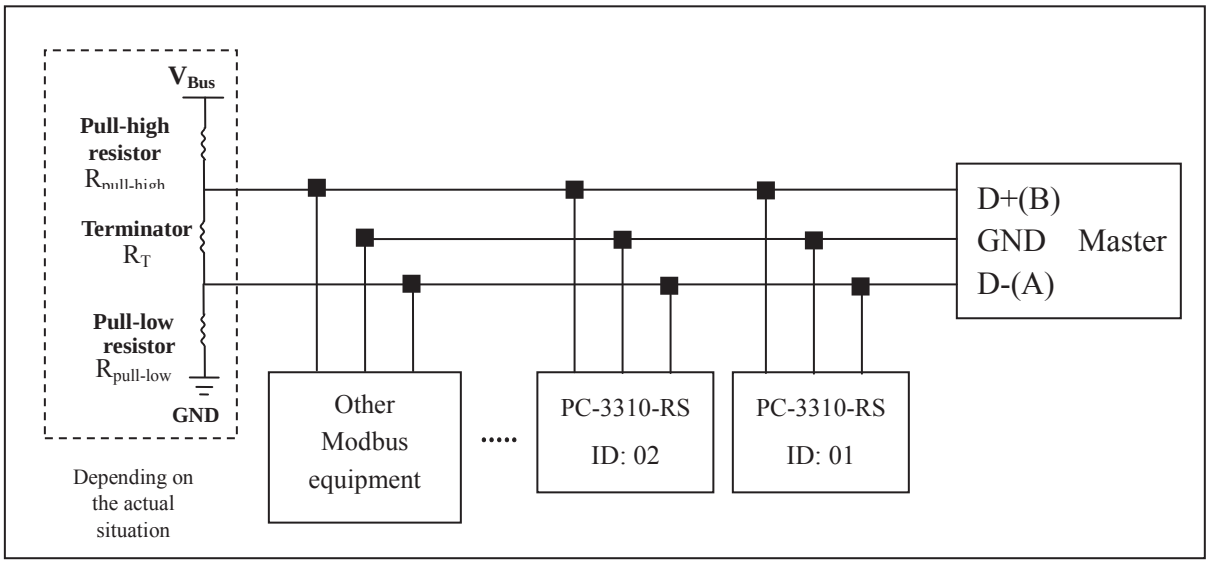

Note:

1. The RS-485 interface of the transmitter has a protective earth terminal. When communicate with the RS-485, there should use with solution ground to eliminate risk of safety.
2. It is allowed to use an 120 ohm impedance matching resistors at terminal equipment in the transmission lines (D +(B), D-(A)) ends across to effectively reduce or eliminate signal reflection.

   Note: there are three possible situations resulting to failure connection:

   a. Open circuits: the signal cable has open circuits.

   b. Short circuits: the insulation that is insufficient between signal cables causes short circuits.

   c. Idle-bus: there is no data transmission in the Controlbus.

   Based on the previous three situations resulting in unknown state of Controlbus's voltage, the receiver accepts the unexpected signals. Therefore, in some harsh environment like multi-transmitter connection, the Controlbus needs the terminator to avoid reflection of baud rate, and it needs pull-high resistor, pull-low resistor, and biasing circuits made up of V_{Bus} as the block diagrams showing above. Besides, it makes sure that the free voltage between transmission line D+(B) and D-(A) is available for maintaining the completeness of the signals. Due to not each environment being suitable to fixed resistor and $V_{Bus,}$ therefore, users must pay attention to the settings. Some parts of connecting instruments (as parts of RS-485 or modules) provide the terminator, pull-high resistor, pull-low resistor, and settings of $V_{Bus.}$ Please refer to the operation manuals of the connecting instruments.

3. Without repeaters, the RS-485 network cannot exceed a maximum of 32 nodes. The maximum communication transmission distance of RS-485 is up to 1200 meters. For long distance transmission, it is recommended to apply cables which are dedicatedly design for RS-485.
4. When communication, all the equipments of the network should be maintained in the same transfer mode, baud rate, parity consistent. And each of the device address cannot be the same, so as not to conflict resulted in the normal network communications.
5. The Modbus command of the transmitter can only access 50 registers. If it exceeds the length, then it returns abnormal message.
6. The waiting time which a slave instrument response to a master machine is different according to each model. Generally, it shall be longer than 0.5 second. (Some models may require a longer waiting-responding time, please note whether the operation manual specified.)

9.2 MODBUS address and command table

The following information is the Modbus address and command table. User who apply a PLC or HMI systems to communicate with this instrument need to pay particular attention to whether if the actual delivery address decrease 1 to deliver. If the above situation happens, it is necessary to add 1 to correspond to this table. For example, the temperature of the table address is 0037H (hexadecimal) or 55 (decimal), if the PLC or HMI system delivers the address which has been decreased 1 and then transmit, then the user must enter the 0038H (hexadecimal) or 56 (decimal) in order to correspond to the correct temperature address code which affected by the PLC or HMI system.

Function Code：03H, 06H, 10H　Modbus response (setup parameter)

Logic address (Hex)	R/W	Item	Number of Byte	Information type	Description of data transmission	Default value	Note
0000H	None						
0001H	R	Equipment's ID	2	USHORT	1-247	1	
0002H	R	Transmitter model	6	USHORT	ASCII Code	PC3310	
0005H	R	Communication protocol	2	USHORT	0: RTU	0	
					1: ASCII		
0006H	R	Serial transmission speed (Baud rate)	2	USHORT	0: 2400	3	
					1: 4800		
					2: 9600		
					3: 19200		
0007H	R	Parity	2	USHORT	0: None	1	
					1: Even		
					2: Odd		
0008H	R/W	Real-time clock*	12	USHORT	Second	2013-01-01, 00:00:00	
0009H	R/W			USHORT	Minute		
000AH	R/W			USHORT	Hour		
000BH	R/W			USHORT	Day		
000CH	R/W			USHORT	Month		
000DH	R/W			USHORT	Year		
000EH	R/W	Code setting*	2	USHORT	Code setting	1111	
000FH	R/W	Temperature mode*	2	USHORT	0: MTC	0	
					1: PTC-1K		
					2: NTC		
					3:PT100	Read only	

9.3 Modbus example description(ex: function code 03H)

The following description takes the temperature reading(0037H) as an example. Set the temperature at the transmitter at MTC 25.1°C, and confirm that host and sub-machine communication format settings are correct. The host according to the following left table to send commands, and then to get the response from sub-machine according to following right table. This example shows the message transmission function code 03H data format. If under other function code, the logic mode is the same.

ASCII Mode:

Request		Response	
Message Framing	Hex	Message Framing	Hex
ID, Address	01	ID, Address	01
Function code	03	Function code	03
Starting Address Hi	00	Byte Count	04
Starting Address Lo	37	Register value Hi	CC
No. of Registers Hi	00	Register value Lo	CD
No. of Registers Lo	02	Register value Hi	41
LRC	C3	Register value Lo	C8
		LRC	56

RTU Mode:

Request		Response	
Message Framing	Hex	Message Framing	Hex
ID, Address	01	ID, Address	01
Function code	03	Function code	03
Starting Address Hi	00	Byte Count	04
Starting Address Lo	37	Register value Hi	CC
No. of Registers Hi	00	Register value Lo	CD
No. of Registers Lo	02	Register value Hi	41
CRC Check Lo	75	Register value Lo	C8
CRC Check Hi	C5	CRC Check Lo	65
		CRC Check Hi	5A

Note: FLOAT is a 32-bit IEEE 754 format. The above table, for an example, is divided into two 16-bit register data transmission. The back 16-bit register(CC CD) will be transferred first, and then the first 16-bit register (41 C8) will be transferred later. Every 16-bit format is high-bit in the front and low-bit in the post. For example, the temperature now is 25.1°C. The 16-bit of FLOAT data(Hexadecimal) will show 41 C8 CC CD. The transmission order is CC CD 41 C8.

0010H	R/W	Clean relay*	2	USHORT	0: OFF	0	
				USHORT	1: AUTO		
0011H	R/W		2	USHORT	ON.S: 0-5999	0	Second
0012H	R/W		2	USHORT	OFF.H: 0-999	0	Hour
0013H	R/W		2	USHORT	OFF.M: 0-59	0	Minute
0014H	R/W		2	USHORT	Hys.S: 0-5999	0	Second
0015H	R/W	Relay 1 *	2	USHORT	0: OFF	1	
					1: AUTO		
0016H	R/W		2	USHORT	0: Hi	0	
					1: Lo		
0017H	R/W		4	FLOAT	SP1	10.00pH/ 1000mV	Data affected by parameter unit
0019H	R/W		4	FLOAT	Hys1	0.1pH/ 10mV	
001BH	R/W	Relay 2 *	2	USHORT	0: OFF	1	
					1: AUTO		
001CH	R/W		2	USHORT	0: Hi	1	
					1: Lo		
001DH	R/W		4	FLOAT	SP2	4.00pH/ -1000mV	Data affected by parameter unit
001FH	R/W		4	FLOAT	Hys2	0.1pH/ 10mV	
0021H	R/W	Backlight Brightness*	2	USHORT	0: AUTO	2	
					1: ON		
					2: OFF		
0022H	R/W		2	SHORT	2: Highest brightness	0	
				SHORT	1: high brightness		
				SHORT	0: Standard		
				SHORT	-1: Low brightness		
				SHORT	-2: Lowest brightness		
0023H	R/W	Backlight Sensitivity*	2	SHORT	2: Highest Sensitivity	0	
				SHORT	1: High Sensitivity		
				SHORT	0: Standard		
				SHORT	-1: Low Sensitivity		
				SHORT	-2: Lowest Sensitivity		

0024H	R/W	Sample average of measurements (Digital Filter)*	2	USHORT	1-60	5	
0025H	R/W	Product adjustment*	4	FLOAT	pH: -5~5 ORP: -300~300	0	
0027H	R/W	Event Number	2	USHORT	1~50	1	
0028H	R	Event time	12	USHORT	Second	2013-01-01 00:00:00	
0029H	R			USHORT	Minute		
002AH	R			USHORT	Hour		
002BH	R			USHORT	Day		
002CH	R			USHORT	Month		
002DH	R			USHORT	Year		
002EH	R	Event code	2	USHORT	0~13	0	
002FH-0030H	Factory reserved						

Note 1 : The actions without * sign only support for function code 03H. The actions with * sign support function code 03H, 06H, 10H.

Note 2 :FLOAT is a 32-bit IEEE 754 format. The above table, for an example, is divided into two 16-bit register data transmission. The back 16-bit register(CC CD) will be transferred first, and then the first 16-bit register (41 C8) will be transferred later. Every 16-bit format is high-bit in the front and low-bit in the post. For example, the temperature now is 25.1^{o}C. The 16-bit of FLOAT data(Hexadecimal) will show 41 C8 CC CD. The transmission order is CC CD 41 C8. For detail description, please refer to Ch 9.3 Modbus example description.

Note3 : USHORT means unsigned short integer.

Function code: 03H Modbus response (measurement parameter)

Logic address (Hex)	R/W	Item	Number of Byte	Information type	Description of data transmission	Default value	Note
0031H	R	Measurement status	2	USHORT	0: Hold Status 1: Measurement	1	
0032H	R	Parameter unit	6	CHAR	pH ORP(mV)	pH	ASCII code
0035H	R	pH/ORP measurement	4	FLOAT	pH/ORP measurement		
0037H	R	Temperature measurement	4	FLOAT	Temperature measurement		

0039H-003FH	Factory reserved						
0040H	R	Sensor zero-point	4	FLOAT	Asy	0mV	
0042H	R	Sensor slope	4	FLOAT	Slope	-59.12mV/pH	
0044H	R	Sensor sensitivity	4	FLOAT	Sensitivity	100%	
0046H	R	R2 coefficient	4	FLOAT	Determination	1.0000	
0048H	R	Calibration Time	2	USHORT	Minute	2013-01-01 00:00	
0049H	R		2	USHORT	Hour		
004AH	R		2	USHORT	Day		
004BH	R		2	USHORT	Month		
004CH	R		2	USHORT	Year		
004DH-0050H	Factory reserved						

Function code: 01H、05H Modbus response (dispersion parameter)

Logic address (Hex)	R/W	Item	BIT	Description	Default value	Note
0070H	R	LO Alarm	1	Contact on	0 (Contact off)	
0071H	R	HI Alarm	1	Contact on	0 (Contact off)	
0072H	R	mA too high	1	Contact on	0 (Contact off)	
0073H	R	mA too low	1	Contact on	0 (Contact off)	
0074H	R	Exceed temp. range	1	Contact on	0 (Contact off)	
0075H	R	Exceed pH/ORP range	1	Contact on	0 (Contact off)	
0076H	R	RLY1 Action	1	Contact on	0 (Contact off)	
0077H	R	RLY2 Action	1	Contact on	0 (Contact off)	
0078H	R	Clean Action	1	Contact on	0 (Contact off)	
0079H-007FH	Factory reserved					
0080H	R/W	Master inform salve to proceed remote calibration*	1	Contact on	0 (Contact on)	

0081H	R	Slave permits proceeding remote calibration	1	Contact on	0 (Contact off)	
0082H	R/W	Master informs salve to finish standard buffer dosing	1	Contact on	0 (Contact off)	
0083H	R/W	Master forces slave read out result directly*	1	Contact on	0 (Contact on)	
0084H	R/W	Master forces slave finish calibration*	1	Contact on	0 (Contact on)	
0085H	R	Calibration error	1	Contact on	0 (Contact on)	
0086H-008FH	Factory reserved					

Note: Among them, the addresses without * mark only support function code 01H; while the addresses with * mark support function code 01H and 05H.

10. Error messages (Error code)

Messages	Reason	Dispositions
Error1	Asy (Zero-point) exceeds upper/lower limitation	1. Please replace by new buffers. 2. Maintain the electrode or change a new electrode, and make another calibration.
Error2	Slope exceeds upper/lower limitation	1. Please replace by new buffers. 2. Maintain the electrode or change a new electrode, and make another calibration.
Error3	The readout is unstable	1. Please check whether there is bubble or air in the glass end of the electrode 2. Maintain the electrode or change a new electrode, and make another calibration.
Error4	1. The temperature is over the range 0~50˚C while calibration. 2. Buffer cannot be recognized	1. Please adjust the standard solution to the proper temperature range. 2. Please check whether there is bubble or air in the glass end of the electrode, or maintain the electrode or change a new electrode, and make another calibration.
Error5	Wrong password **ERROR CODE**	Re-enter a password
Error9	Serious error that does not permit any further measuring	Please call service engineer.

11. Maintenance

Generally speaking, under normal operation, the transmitter needs no maintenance **except regular cleaning and calibration of the electrode to ensure accurate and stable measurement and system operation.**

The cleaning cycle for the electrode depends on the pollution degree of the measurement sample. Normally, it is recommended to make weekly cleaning. The following chart gives introductions of different cleaning methods according to different type of contaminations to provide the operators with reference for cleaning and maintenance.

Type of Contaminations	Cleaning methods
Measuring solutions containing proteins. (Contamination of the junction)	The electrode should be soaked in Pepsin/HCl for several hours. METTLER-TOLEDO 9891 Electrode Cleaner is recommended.
Measuring solution containing sulfides. (The junction becomes black)	The junction should be soaked in Thiourea/HCl solution until being bleached. METTLER-TOLEDO 9892 Electrode Cleaner is recommended.
Contamination by grease or organic substance	Short rinsing of the electrode with acetone and ethanol.
Acid and alkaline soluble contaminations	Rinsing the electrode with 0.1mol/l NaOH or 0.1mol/l HCl for a few minutes.
Apply clean water to flash the electrode after above cleaning steps and immerse theelectrode in 3M KCl solution for 15 minutes at least, and then calibrate the electrode.	
The electrode should only be rinsed and never rubbed or otherwise mechanicallycleaned, since this would lead to electrostatic charges. This could cause an increase in the response time.	
In cleaning the platinum electrode, the platinum ring of the electrode can be rubbed gently with a wet soft piece of cloth.	

※ The frequency of electrode cleaning depends on the type and degree of contamination. However it is recommended that the electrode be cleaned once a week.

Appendix

Table 1: **TECH** buffers

TECH buffers			
TEMP ˚C	Buffer 4.01	Buffer 7	Buffer 10
5	3.999	7.087	10.241
10	3.998	7.053	10.155
15	3.999	7.031	10.116
20	4.002	7.011	10.047
25	4.006	6.996	9.998
30	4.011	6.985	9.952
35	4.018	6.976	9.925
40	4.031	6.971	9.874
45	4.047	6.969	9.843
50	4.055	6.969	9.810

Table 2: **NIST** standard buffers

NIST standard buffers(DIN 19266)					
TEMP ˚C	Buffer 1.68	Buffer 4.01	Buffer 6.86	Buffer 9.18	Buffer 12.45
5	1.668	4.004	6.951	9.395	13.207
10	1.670	4.000	6.923	9.332	13.003
15	1.672	3.999	6.900	9.276	12.810
20	1.675	4.001	6.881	9.225	12.627
25	1.679	4.006	6.865	9.180	12.454
30	1.683	4.012	6.853	9.139	12.289
35	1.688	4.021	6.844	9.102	12.133
40	1.694	4.031	6.838	9.068	11.984
45	1.700	4.043	6.834	9.038	11.410
50	1.707	4.057	6.833	9.011	11.705

Table 3: **Define** (Built then in by end-user) standard buffers

Define standard buffers table					
TEMP ˚C	Buffer 1	Buffer 2	Buffer 3	Buffer 4	Buffer 5
5	2.010	4.040	7.070	9.160	12.410
10	2.010	4.020	7.050	9.110	12.260
15	2.000	4.010	7.020	9.050	12.100
20	2.000	4.000	7.000	9.000	12.000
25	2.000	4.010	6.980	8.950	11.880
30	2.000	4.010	6.980	8.910	11.720
35	2.000	4.010	6.960	8.880	11.670
40	2.000	4.010	6.950	8.850	11.540
45	2.000	4.010	6.950	8.820	11.440
50	2.000	4.000	6.950	8.790	11.330

SUNTEX

SUNTEX INSTRUMENTS CO., LTD.

13F, No. 31, Lane 169, Kangning St.,
Xizhi Dist., New Taipei City, Taiwan (R.O.C.)
Tel: 886-2-2695-9688
Fax: 886-2-2695-9693
e-mail: suntex@ms1.hinet.net

www.suntex.com.tw/en

5040C PC-3310-RS/Technical data subject to alternations/ Quality Systems ISO 9001/201403