SPEC SHEET

Digital Indicating Resistivity Meter

AER-102- SE

- Various settings, calibration operable via communication (RS-485)
- 48x96mm square, Panel mounting type

Name	Digital indicating resistivity meter
Model	AER-102-SE
Measurement range	

Input		Scale Range	Resolution
Resistivity	Conductivity cell constant 0.01/cm	0.000 to 0.200 MΩ•cm	0.001 MΩ•cm
		0.00 to 2.00 MΩ•cm	0.01 MΩ•cm
		0.00 to 20.00 MΩ•cm	0.01 MΩ•cm
		0.0 to 100.0 MΩ•cm	0.1 MΩ•cm
		0.00 to 2.00 kΩ•m	0.01 kΩ•m
		0.0 to 20.0 kΩ•m	0.1 kΩ•m
		0.0 to 200.0 kΩ•m	0.1 kΩ•m
		0 to 1000 kΩ•m	1 kΩ•m
Temperature	Pt100	0.0 to 100.0 ℃	0.1 ℃

Decimal point place is selectable for Temperature input.

Repeatability	Within ±0.5% of full scale
Linearity	Within ±0.5% of full scale
Indicating accuracy	Temperature: ±1℃
Transmission output	Converting resistivity or temperature to analog signal every input sampling, and outputs the value in current. (Default value: Resistivity) Resolution : 1/20000 Current : 4 to 20mA DC (Load resistance: Max.550Ω) Output accuracy : Within ±0.3% of Transmission output span If Transmission output high limit and low limit are set to the same value, Transmission output low limit value will be outputted.
Contact output	Relay contact : 1a (Bit reading via the status flag in Serial communication) Control capacity : 3A 250V AC (Resistive load) 1A 250V AC (Inductive load, cosϕ=0.4) Electrical life : 100,000 cycles Output action : P control, ON/OFF control
Cell constant correction value (Span) adjustment	Adjustment range : 0.700 to 1.300
Temp. calibration	Calibration range: -10.0 to 10.0℃
Self-diagnosis	The CPU is monitored by a watchdog timer, and if an abnormal status is found on the CPU, the instrument is switched to warm-up status.
Temp. compensation element	2-electrode resistivity sensor (Temperature element: Pt100)
Temp. compensation range	0.0 to 100.0℃
Ambient temp.	0 to 50℃
Relative humidity	35 to 85%RH (Non-condensing)

Power supply	AER-102-SE : 100 to 240V AC 50/60Hz Allowable fluctuation range: 85 to 264V AC AER-102-SE-1: 24V AC/DC 50/60Hz Allowable fluctuation range: 20 to 28V AC/DC
Structure	Flush (Applicable panel thickness: 1 to 8mm) Case: Flame-resistant resin, Color: Black Front panel: Membrane sheet Drip-proof/Dust-proof: IP66 (for front panel only)
Protection structure	Overvoltage category Ⅱ, Pollution degree 2 (IEC61010-1)
Safety standards	RoHS directive
Dimensions	W48×H96×D110mm Case depth: 98.5mm (when mounted through a control panel)
Dimensions (Scale: mm)	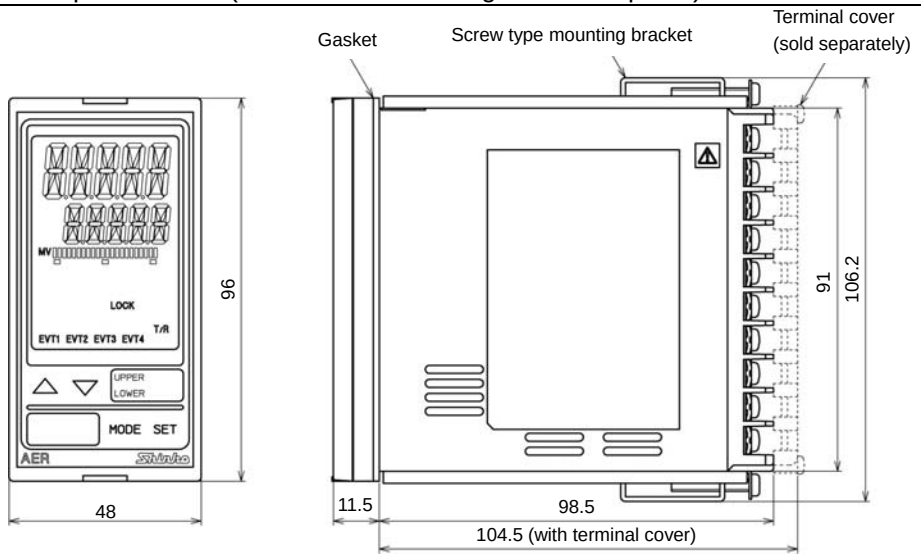
Terminal arrangement	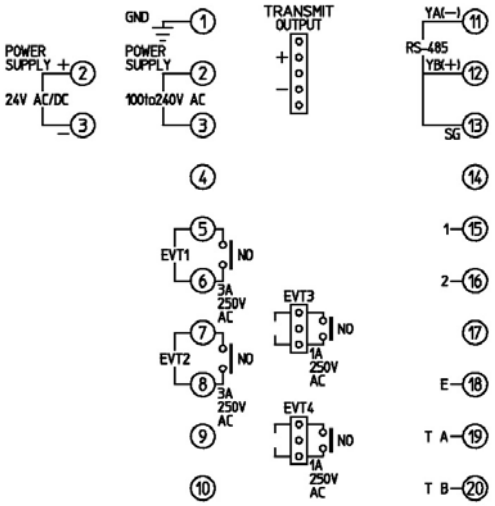 GND : Ground POWER SUPPLY : 100 to 240V AC or 24V AC/DC EVT1 : EVT1 output EVT2 : EVT2 output EVT3 : EVT3 output EVT4 : EVT4 output TRANSMIT OUTPUT : Transmission output RS-485 : Serial communication RS-485 1 ⑮ : Resistivity sensor terminal (2-wire) 2 ⑯ : Resistivity sensor terminal (2-wire) E ⑱ : Shielded wire Temp. input ⑲-⑳ : A, B, Temperature compensation sensor terminals (2-wire type)