TC-7100 Microprocessor Turbidity/S.S. Transmitter

Operation Manual

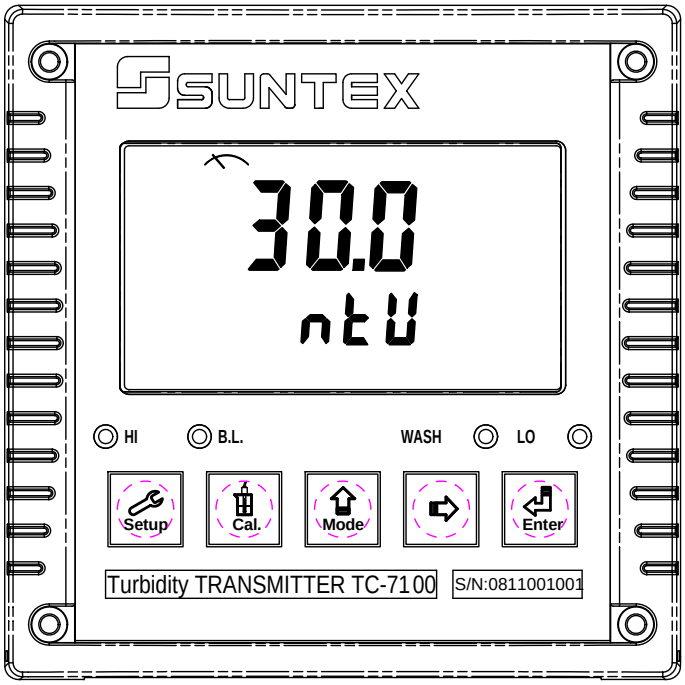

SUNTEX

CONTENTS

Brief Instruction

Settings of measurement parameters (see chapter 7)

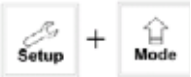

In measurement mode, pressing " Setup " and " Mode " simultaneously allows you to access Set-up mode.

If you like to use security code of settings, the original code is 1111.

In the Code function, entering original code or user's designated code allows you to reset the code or shut down this function.

In the Configuration function, there is no function.

In the Type function, please select a model type of sensor.

In the Unit function, please select correlated measurement unit.

In the Relay 1 function, please select 

or 

to activate it or not.

In the Relay 2 function, please select 

or 

to activate it or not.

In the Clean function, please set wash time and stop duration.

In the Out function, please set analog output with 

or 

In the Scrub function, please set sensor lens scrub time interval.

In the Second function, please set average measurement reading time.

In the Real time clock function, please set year, date, and time. (TC-7100RS only)

In the Serl function, please set MODBUS's encoding, check bit, ID code and baud speed. (TC-7100RS only)

In the Back light function, please set brightness of display and sensitivity of light-source sensor.

Settings of Calibration (see chapter 8)

In measurement mode, pressing " Cal. " and " Mode " simultaneously allows you to access Calibration mode.

If you like to use security code of calibration, the original code is 1111.

In the Code function, entering original code or user's designated code allows you to reset the code or shut down this function.

Ct 1 Two or up to five points calibration, and in which “Ct 1” must be 0 NTU calibration.

CA Offset calibration.

Turbidity standard solution 2 to 5 point calibration

Note: “Ct 1” must be 0 NTU standard solution calibration.

Recommendation: Do not calibrate the value over 80% of measurement full scale.

1. Enter CT1 Calbration mode. After cleaning up the sensor, inmmerse the sensor into 0.00 NTU standard solutioin. Press Enter to confirm it. The display shows “0.00NTU”. Continually press Enter to send the calibration signal to sensor.

2. At the time, the sensor responses 2 mA analog signal to indicate that the sensor is in the process of inner calibration.

3. After inner calibration of the sensor, it responses 4 mA analog signal to transmitter. Press Enter to calibrate the sensor with the 0.00 NTU standard solution.

4. The display shows Ct2 for entering the second point calibration. Clean the sensor before immersing it into well-prepared standard solution. Constantly stir the solution. Press Enter to confirm it. Enter turbidity range selection.

5. Enter turbidity range selection, press Mode or ⇨ to select suitable range. Press Enter and the value starts to twinkle. Press Mode or ⇨ to adjust value until it is the same with the standard solution’s value. Press Enter to display the analog signal of the sensor.

6. Enter analog signal display. Wait until the signal becomes stable, then you may start the calibration.

7. The display shows Ct3 for entering the third point calibration. The procedure is the same as step 4~6.

Note: To finish the calibration procedure as a two point calibration, when the display shows Ct3 please press Mode and skip to step 10.

8. The display shows Ct4 for entering the forth point calibration. The procedure is the same as step 4~6.

Note: To finish the calibration procedure as a three point calibration, when the display shows Ct4 please press Mode and skip to step 10.

9. The display shows Ct5 for entering the fifth point calibration. The procedure is the same as step 4~6.

Note: To finish the calibration procedure as a four point calibration, when the display shows Ct5 please press Mode and skip to step 10.

10. When the calibration is successful, the display screen shows the word “CAL PASS”; when the calibration is unsuccessful, the display screen shows the word “CAL Err”. (Please refer to chapter 10 for error message, causes and treatment seeking.)

Offset Calibration

Note: Before the implementation of offset calibration, it is necessary to make a 2 to 5 points standard solution calibration in advance.

1. After entering into display CA, put the sensor which has been cleaned into turbidity standard solution, and constantly stir the solution. Press Enter to confirm and enter into turbidity range selection.

2. Enter turbidity range selection and press Mode or ⇨ to select suitable range. Press Enter . At the time, the display value starts to twinkle, then press Enter to enter analog signal display.

3. Enter analog signal display. Wait until the display value becomes stable. Press Enter to starts calibration.

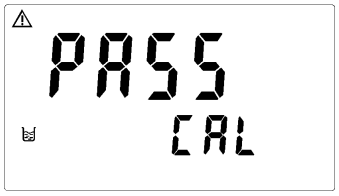

4. When the calibration is successful, the display screen shows the word “CAL PASS”; when the calibration is unsuccessful, the display screen shows the word “CAL Err”. (Please refer to

Reset

Press Setup + Mode for 5 seconds, then press Enter. The display will show ⏲ to indicate that the “Master Reset” has been done.

Press Cal. + Mode for 5 seconds, then press Enter The display will show ⏲ to indicate that the “Calibration Reset” has been done.

1.Specifications

Model		TC-7100	TC-7100RS
Measuring mode		Turbidity / Suspended Solids	
Measuring unit		TURB: NTU, FTU, FNU SS: ppm, mg/l	
Measuring range		Depend on which sensor as below	
Resolution		AUTO(0.001 / 0.01 / 0.1 / 1)	
Signal average time		0 60 sec. selectable/default 30 sec.	
Ambient temperature		0 50°C	
Display		CD display with sensitization sensor for auto/manual illumination function	
Analog output		Isolated DC 0/4~20mA corresponding to Turb/SS, max. load 500Ω	
Serial interface		-	RS485(MODBUS RTU or MODBUS ASCII)
Setting	Contact	Relay ON/OFF, 240VAC, 0.5A Max.	
	Active	Hi/Lo two limited programmable	
Wash	Contact	240VAC, 0.5A Max.	
	Active	ON: 0~9999 sec. / OFF: 0.0~999.9 hours	
Voltage output		DC±12V	
Power supply		100V 240VAC±10%, 50/60Hz	
Installation		Wall or Pipe or Panel mounting	
Dimensions		144 mm × 144 mm × 115 mm (H×W×D)	
Cut off dimensions		138 mm × 138 mm (H×W)	
Weight		0.82Kg	
Certification		IP 65 (NEMA 4)	

Sensor Model No.	TC-100	TC-500	TC-3000	TCS-1000
Measuring range	0.00-20.00NTU or 20.1-100.0NTU	0.0-200.0NTU or 201-500 NTU	0-3000NTU	0-1000ppm
Cleaning system	Auto scrub cleaning upon power on			
Time interval for cleaning	1~9 min, user selectable / Default 30 min.	1~9 min, user selectable / Default 10 min		
Ambient temperature	0-40°C			
Wet part	SUS 316L,Sapphire glass, Fluorocarbon rubber, EPDM,POM			
Dimensions	Φ32×163mm			
Weight	Approx. 930g			
Protection degree	IP68			
Cable length	10m			
Accuracy	±3% of full scale			
Repeatability	±2% of full scale			
Installation	Immersion in open tank			

2. Precautions for installation

Wrong wiring will lead to breakdown or electrical shock of the instrument, please read this operation manual clearly before installation.

- Make sure to remove AC power from the controller before wiring input, output connections, and remove it before opening the controller housing.
- The installation site of the controller should be good in ventilation and avoid direct sunshine.
- The material of signal cable should be special coaxial cable. Strongly recommend using our coaxial cable. Do not use normal wires instead.
- Avoid electrical surge when using power. Especially when using three-phase power, use ground wire correctly.

3. Assembly and installation

3.1 Controller installation: This controller can be installed through panel mounting, wall mounting and pipe mounting.

Installation of panel mounting: First, prepare a square hole of 138 x 138mm on the panel box, and then insert the controller directly into the panel box. Insert the accessorial mounting bracket from the rear, and make it be fixed in to pickup groove.

3.2 Illustration of panel mounting**:**

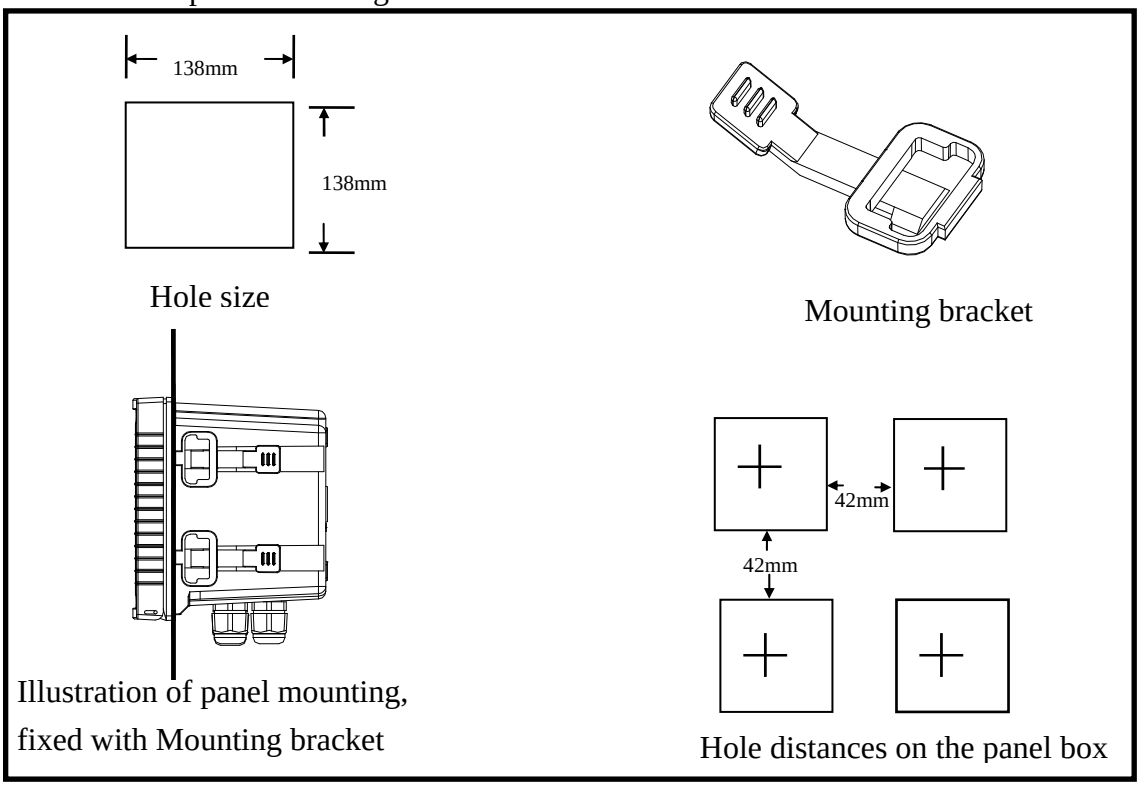

3.3 Illustration of Wall mounting and pipe mounting

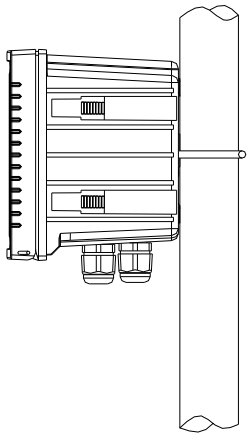

Installation of pipe mounting
Fixed with U-shaped pipe clip
Order No.: 8-34

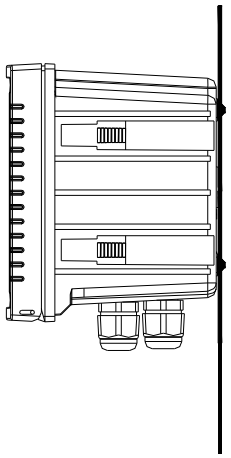

Installation of wall mounting
Fixed with 4 x M5 screws

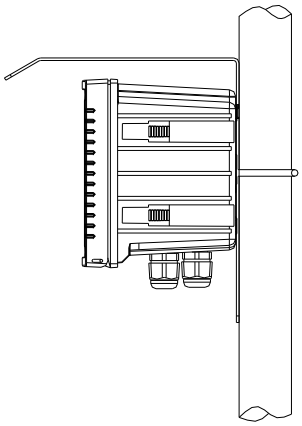

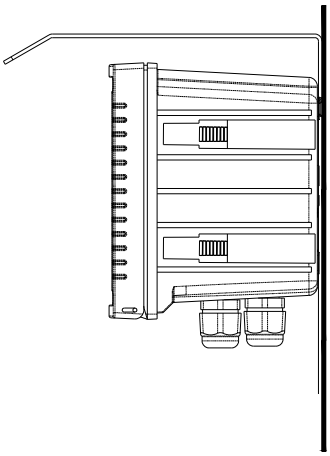

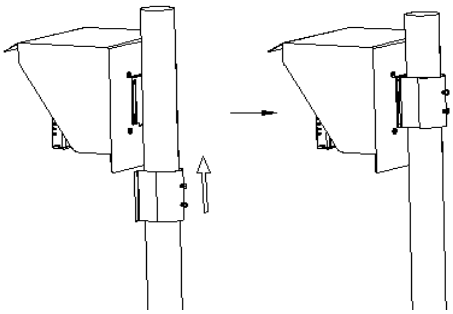

Sun Shield (Pipe mounting)
Order No.: 8-35 and 8-35-1

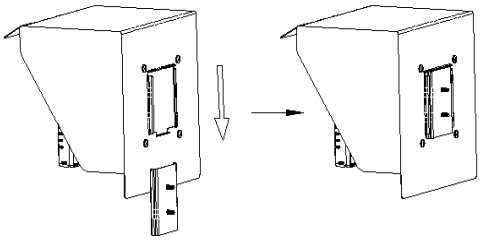

Sun Shield (Wall mounting)
Order No.: 8-35 and 8-35-2

4. Overview of Turbidity/SS transmitter TC-7100

4.1 Illustration of rear panel:

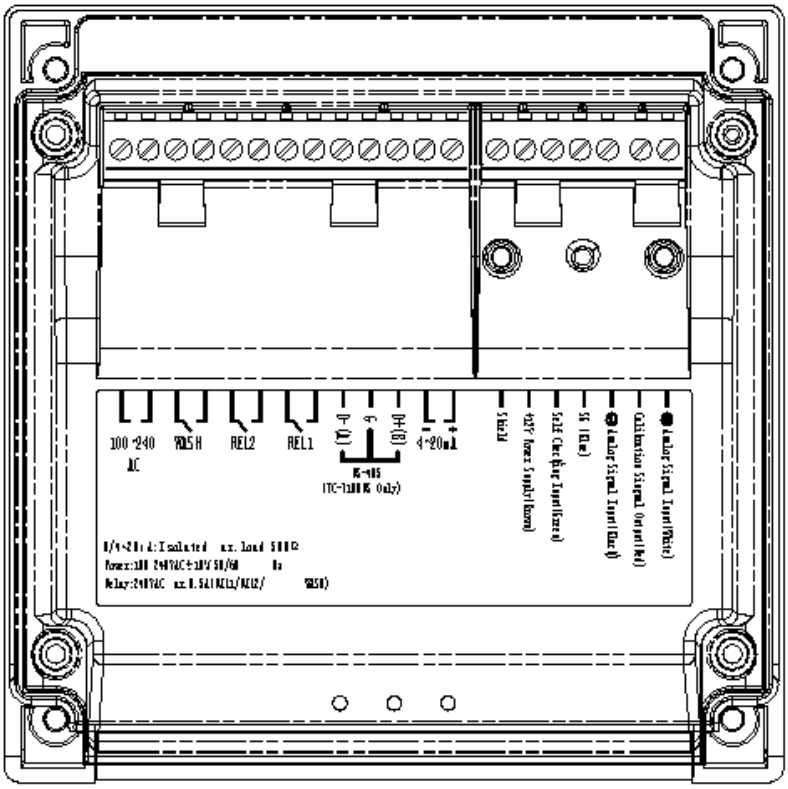

4.2 Illustration of terminal function:

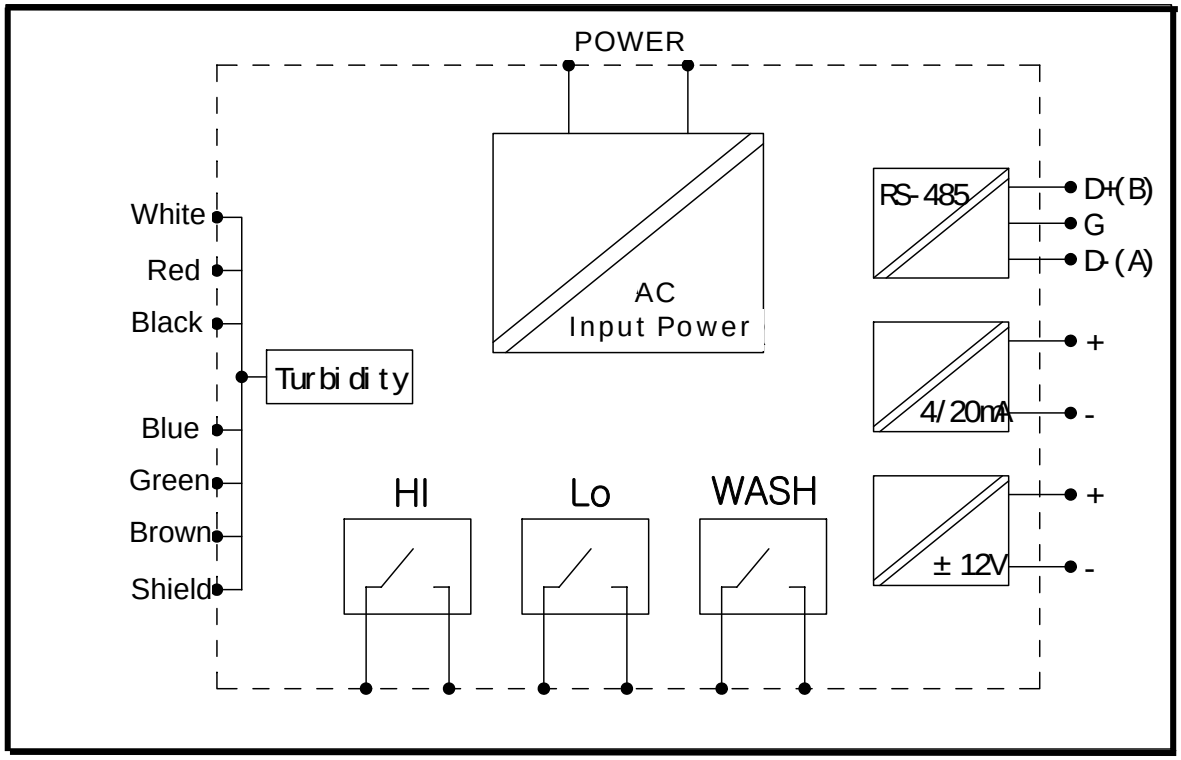

4.3 Description of terminal function:

+Analog signal Input(White)	：Connect to analog signal (+) of the sensor
Calibration signal Output(red)	：Connect to self calibration output of the sensor
-Analog signal Input(Black)	：Connect to analog signal (-) of the sensor
SG(Blue）	：Connect to power supply (-) of the sensor
Self checking Input(Green)	：Connect to self check input of the sensor
+12V Power Supply(Brown)	：Connect to power supply of the sensor and output contact of DC+12V
Shield	：Connect to shield wire
4~20mA(+)	：Master measurement current output terminal +, for external recorder or PLC control
4~20mA (-)	：Master measurement current output terminal -, for external recorder or PLC control
NC / D+（B）	：NC or D+(B) of RS-485 output (TC-7100RS only)
NC / G	：NC or RS-485 output GND (TC-7100RS only)
NC / D-（A）	：NC or RS-485 output D-(A) (TC-7100RS only)
REL1	：HI, External relay terminal High Point control
REL2	：Lo, External relay terminal Low Point control
WASH	：External wash relay terminal
100~240AC	：Power supply terminal

4.4 Cable connection:

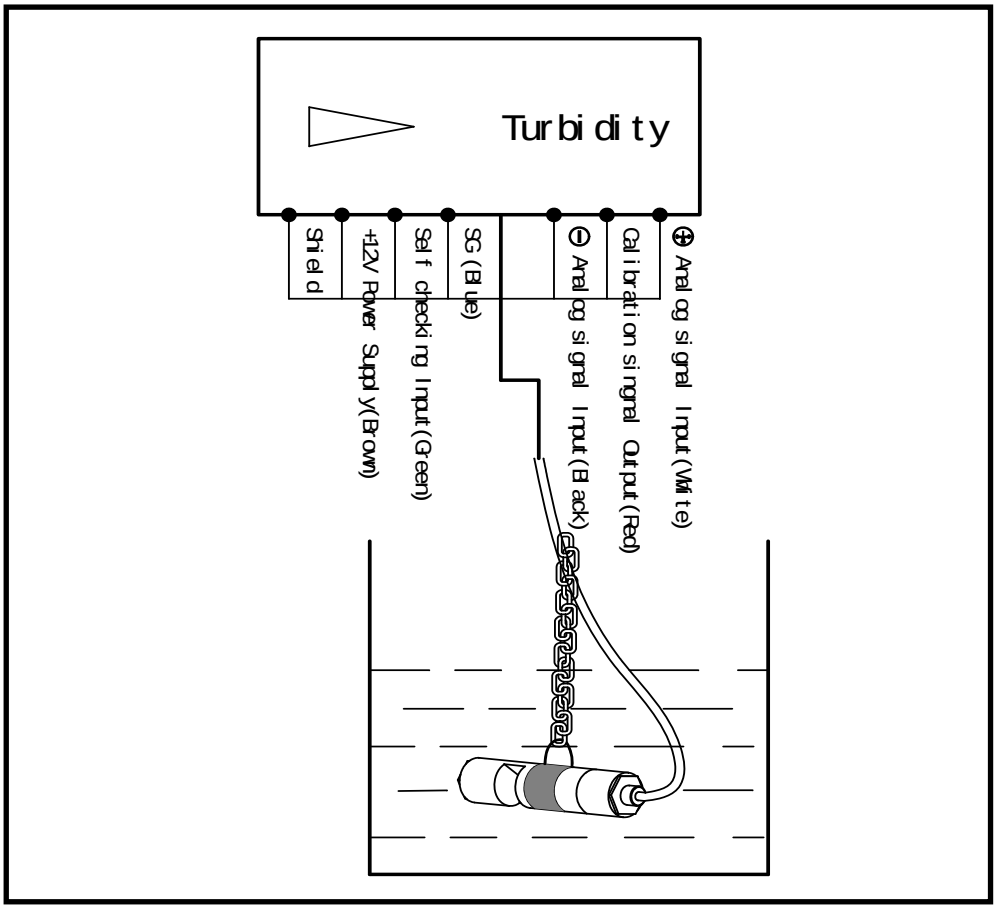

4.5 Electrical connection diagram

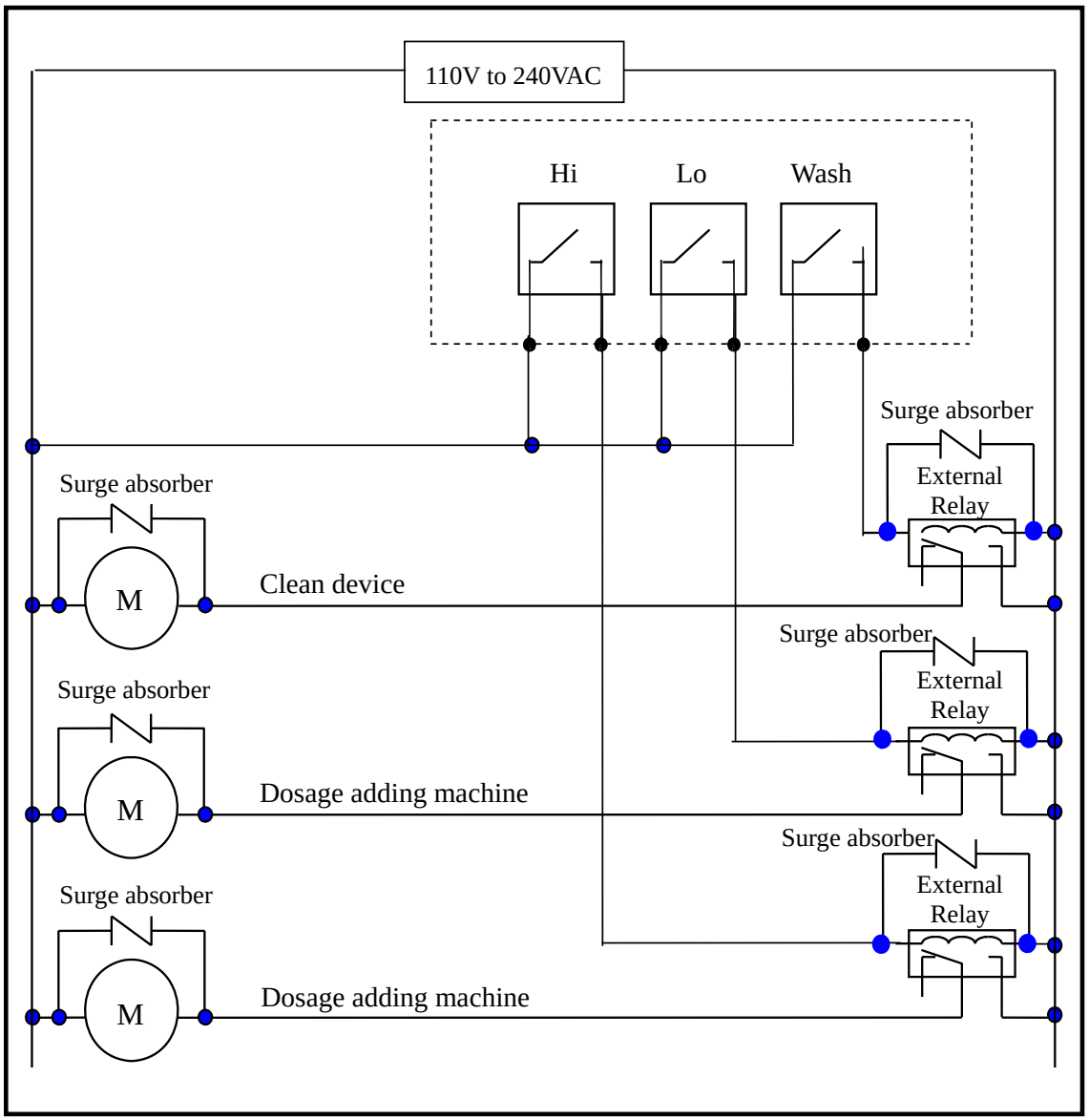

5. Configuration:

5.1 Illustration of front panel:

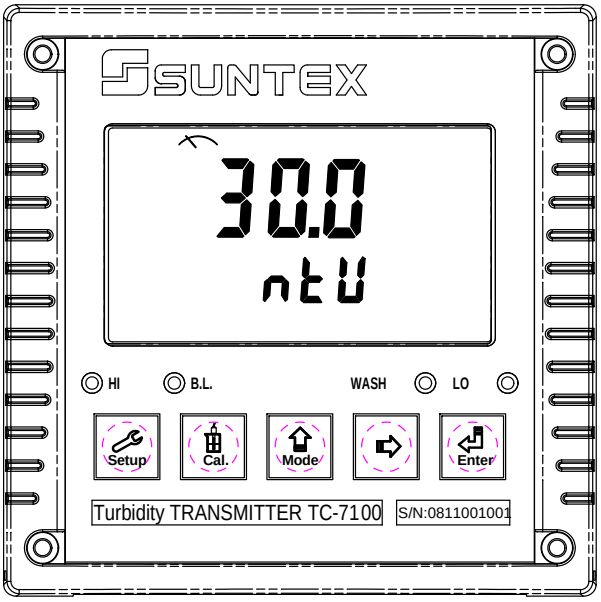

5.2 Keypad:

In order to prevent inappropriate operation by others, before the parameter setting and calibration, the operation applies multi-keys, and coding protection if necessary. Description of the key functions is in the following:

In the parameter set-up mode, pressing this key allows you exit parameter set-up mode and back to Measurement mode.

In the Calibration mode, pressing this key allows you exit Calibration mode and back to Measurement mode.

In the parameter set-up mode and Calibration mode, pressing this key to increase the value or to scroll to other function.

In the parameter set-up mode and Calibration mode, pressing this key to decrease the value or to scroll to other function.

Key for confirmation; pressing this key is essential when modifying data value or selecting the parameter setting items in the window.

+

: In the Measurement mode, pressing these two keys simultaneously allows you enter Calibration mode.

+

: In the Measurement mode, pressing these two keys simultaneously allows you enter parameter set-up mode.

(Master Reset) Restore factory default parameter's settings

In the Measurement mode, press the two keys Setup + Mode simultaneously for five seconds, and then press Enter until you see a clock signal appearing on the display; then loose all keys to restore factory default settings.

(Calibration Reset) Restore factory default calibration's settings

In the Measurement mode, press the two keys Cal. + Mode simultaneously for five seconds, and then press Enter until you see a clock signal appearing on the display; then loose all keys to restore factory default calibrations.

5.3 LED indicators:

WASH: Washing device operation indicator lamp; when the washing device is started up, the Alarm indicator will light.

HI : Controlling operation indicator lamp; when the high setting point is reached, the REL1 indicator will light.

LO : Controlling operation indicator lamp; when the low setting point is started up, the REL2 indicator will light.

B.L. : Light sensor; in the automatic display backlit mode, the lamp will light or go out as the change of environmental brightness.

5.4 Display:

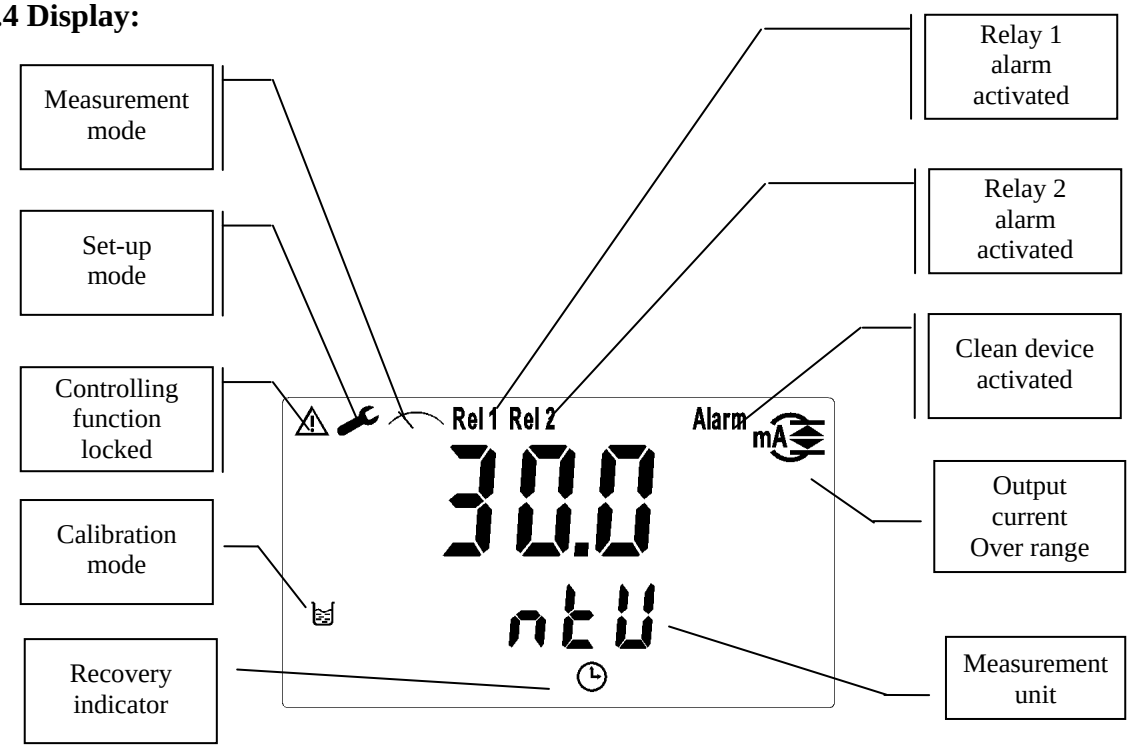

mA : Measurement is over-range than the setting which is corresponding to output 20mA

mA : Measurement is over-range than the setting which is corresponding to output 0/4mA

6. Operation

6.1 Measurement mode:

After all electrical connections are finished and tested, connect the instrument to the power supply and turn it on. The transmitter will automatically entering measurement mode with the factory default settings or the last settings from user.

6.2 Set-up mode:

Please refer to the set-up instructions in Chapter 7, and press Setup to back to measurement mode.

6.3 Calibration mode:

Please refer to the calibration instruction in chapter 8, and press Cal. to back to measurement mode.

6.4 Reset:

6.4.1 Master reset:

In the measurement mode, press two keys Setup + Mode simultaneously for five seconds, and then press Enter until you see a clock signal appearing on the display; then loose all keys to restore factory defaults.

Factory defaults: Sensor Model：100NTU
Measurement unit：NTU
High point alarm：AUTO, SP1= 80 NTU, db1= 0.50 NTU
Low point alarm：AUTO, SP2 =20 NTU, db2= 0.50 NTU
Built-in scrub：AUTO
Wash time：ON =0000 s., OFF =000.0 H, db= 0000 s.
Current output：4~20 mA, 0.00~100NTU
Signal average time：30sec
Display backlit：AUTO, b.L.= 0, SEnS =0
Code set-up：off
(TC-7100RS only) :
Date/Time：2000/1/1, 0 hr/0 min./0 sec.
MODBUS set-up：RTU, non-parity, ID= 31, baud speed= 9600

6.4.2 Calibration reset:

In the Measurement mode, press the two keys Cal. + Mode simultaneously for five seconds, and then press Enter until you see a clock signal appearing on the display; then loose all keys to restore factory default calibrations.

Factory default:

Calibration mode: Standard solution calibration Ct1

6.5 Time and date mode (TC-7100RS only)

In the measurement mode, press the key Enter to check the year, date, and time. You can shift among them sequentially by pressing the key Enter or enter the next page by waiting for 5 seconds. After the checkup, it will back to measurement mode automatically.

7. Settings

Block diagram of settings:

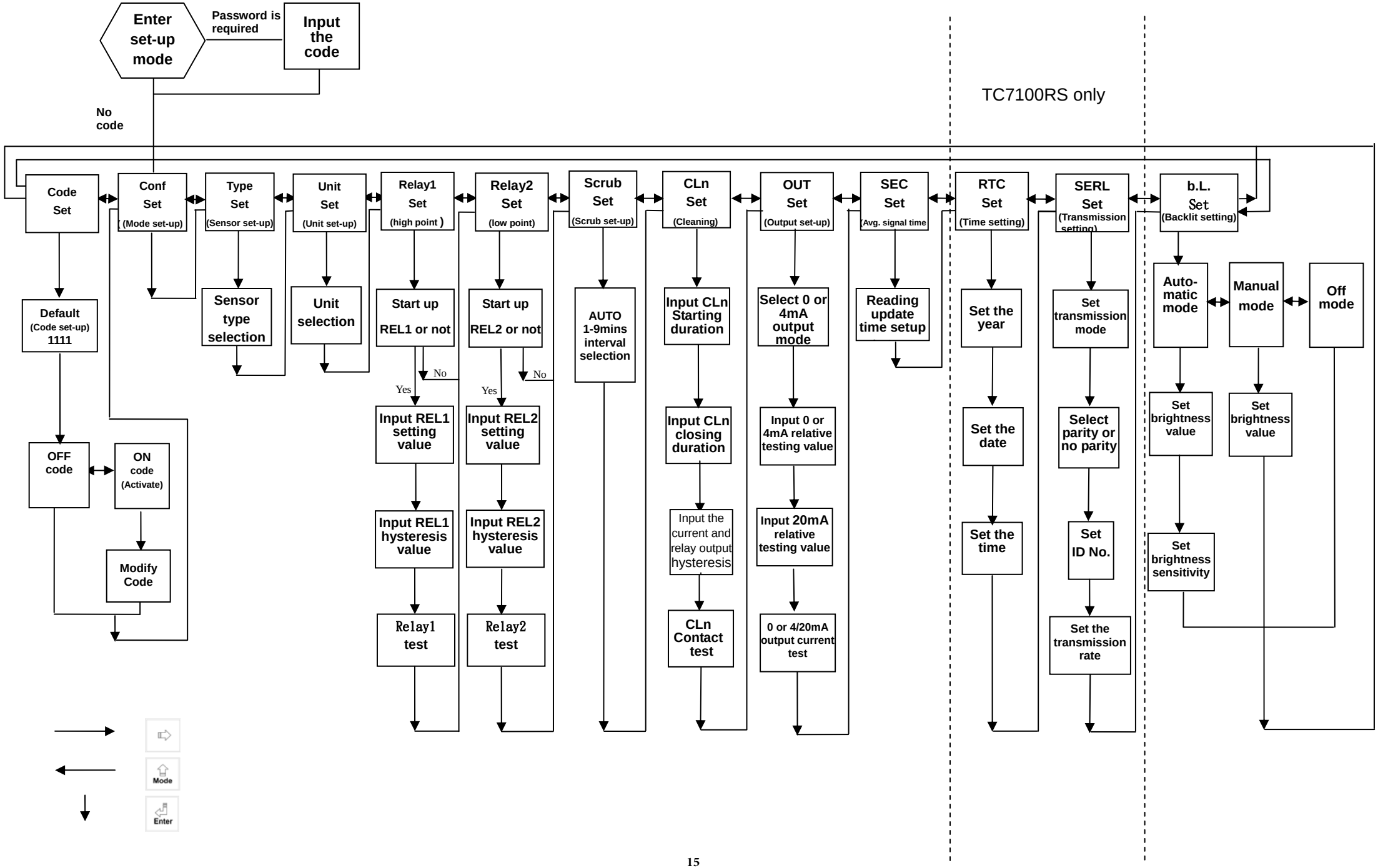

7.1 Entry of set-up mode

In the measurement mode, pressing the two keys Setup + Mode simultaneously allows you enter the parameter set-up mode. You can back to the measurement mode at any time by pressing the key Setup . The original code is 1111.

7.2 Security code of settings:

In the set-up mode, you can set up the code by pressing the key Mode , and confirm by pressing the key Enter .

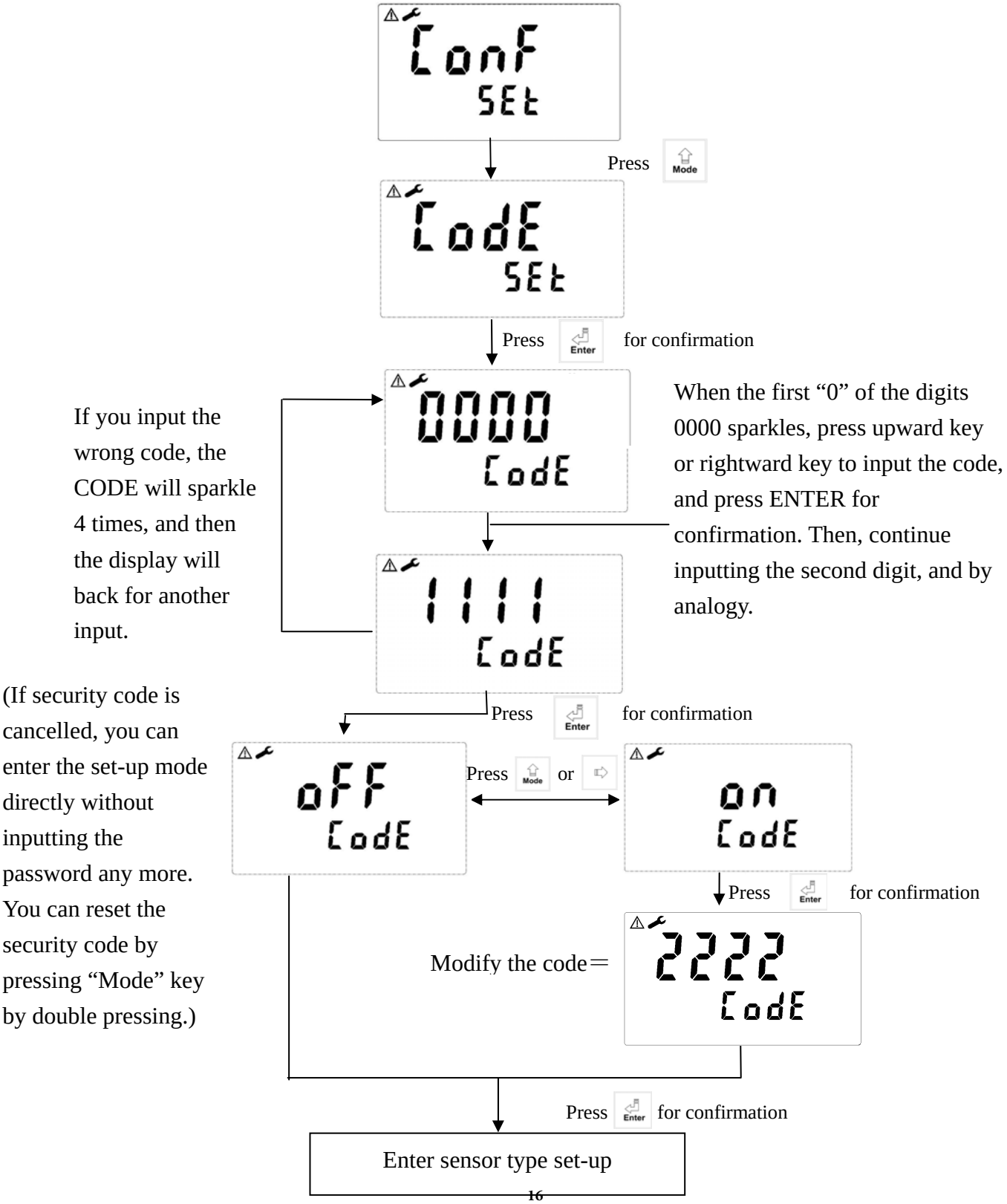

7.3 Sensor model set-up

Enter the sensor model set-up

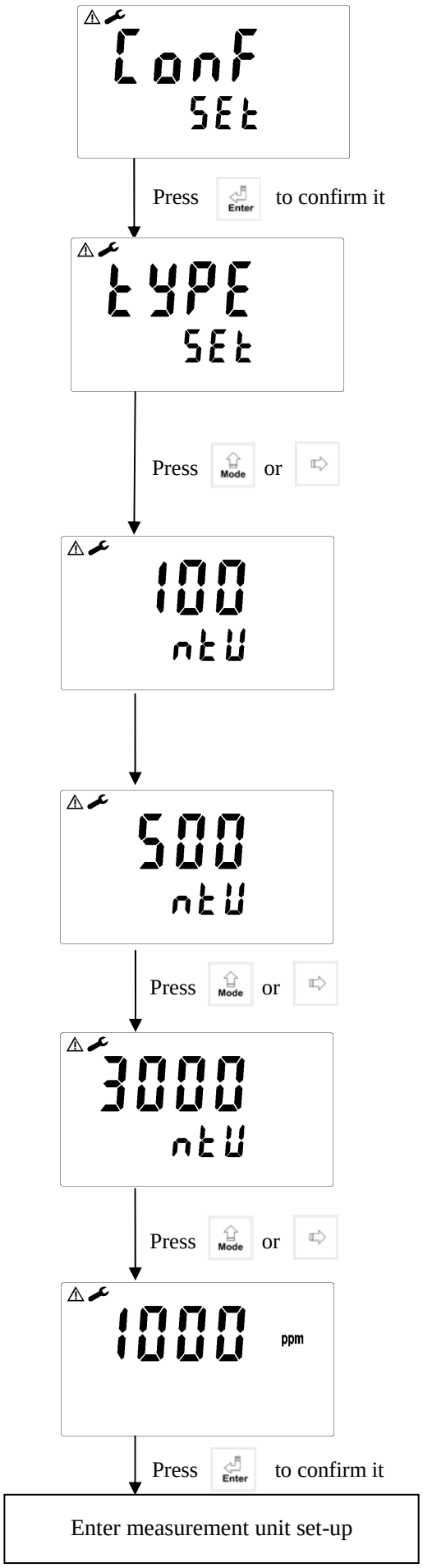

7.4 Measurement unit set-up

Enter measurement unit set-up

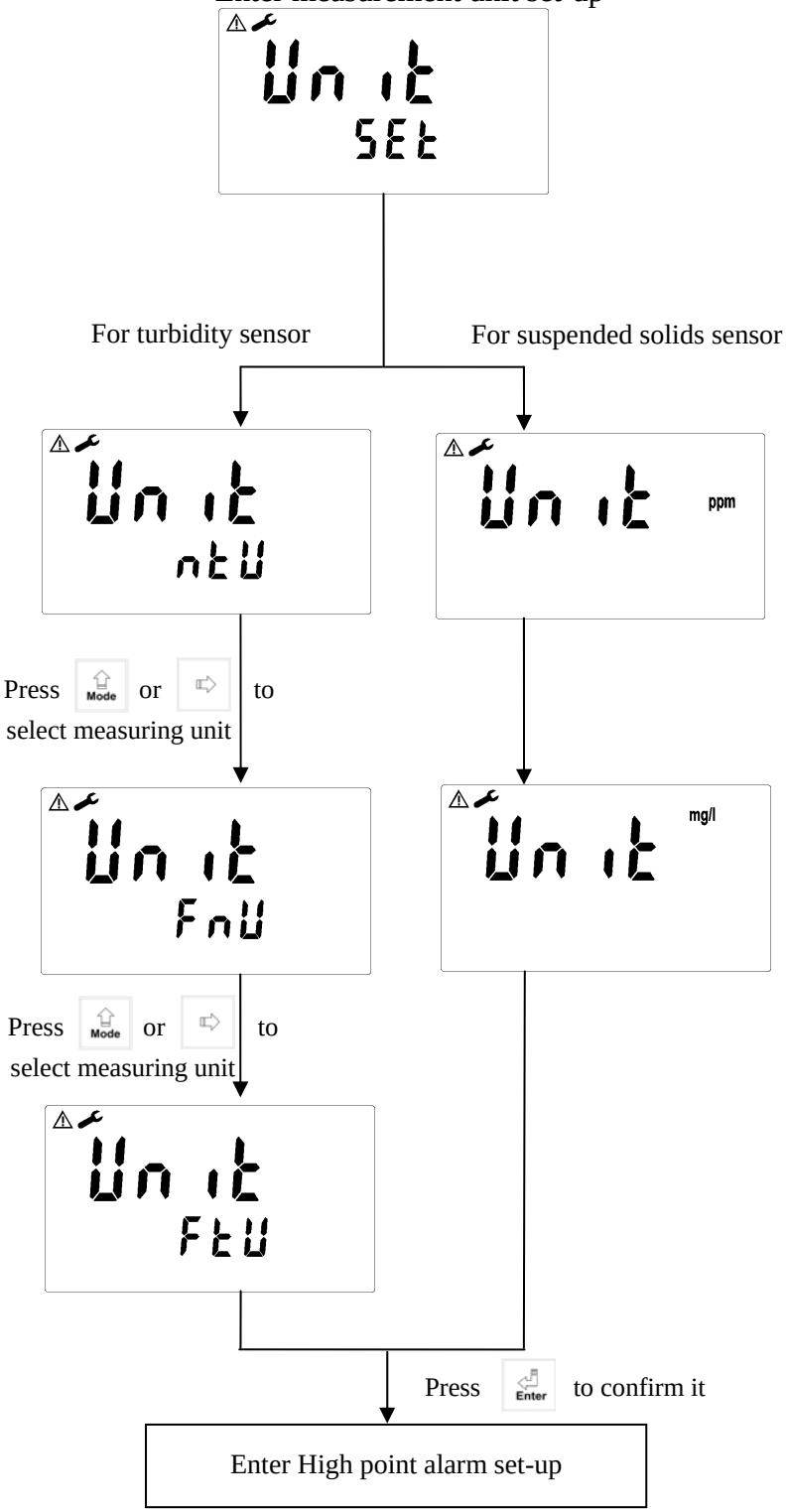

7.5 Hi point

Set the TH (THRESHOLD) and DB (DEADBAND) of Hi (REL1).

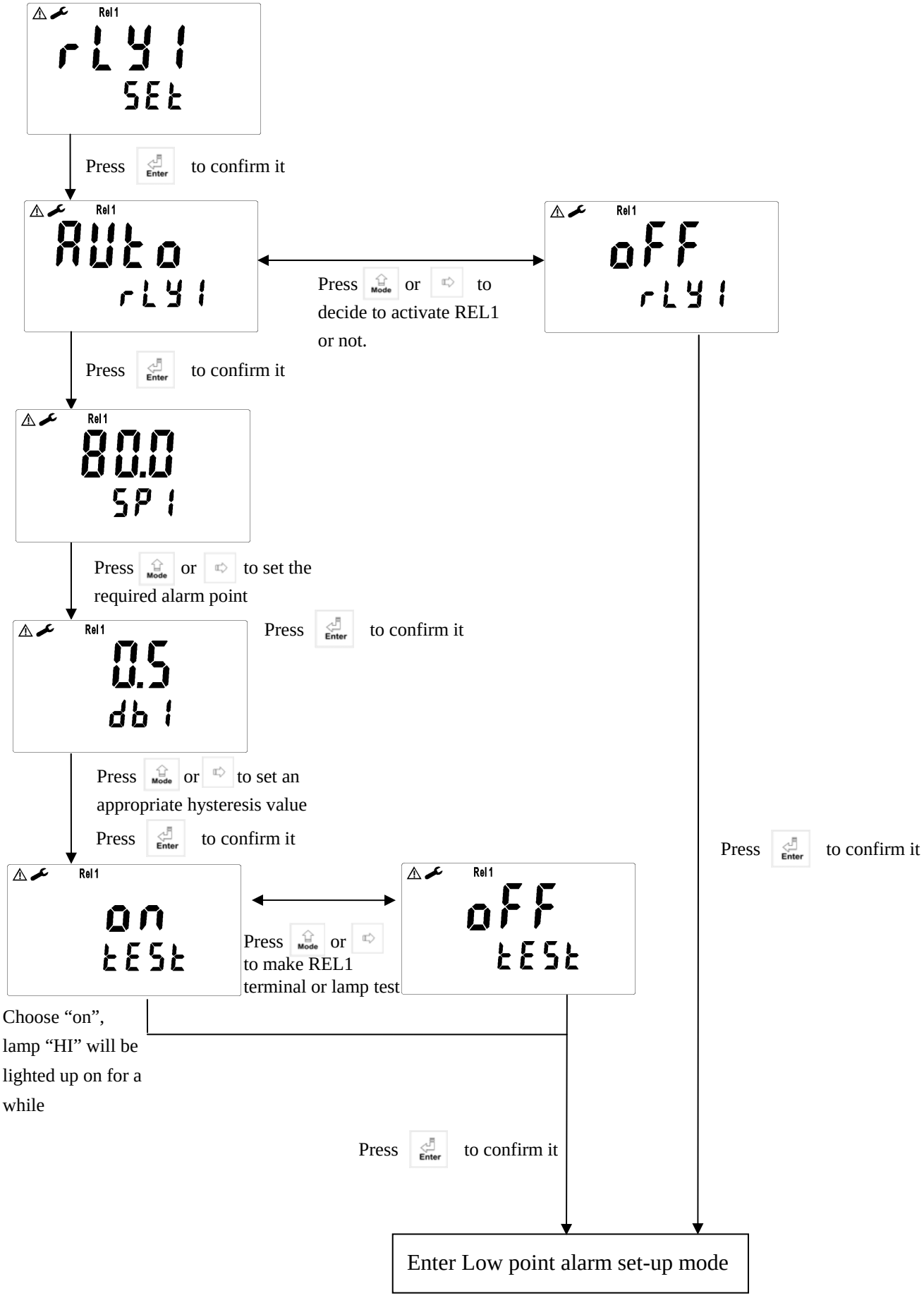

7.6 Lo point:

Set the TH (THRESHOLD) and DB (DEADBAND) of Lo (REL2).

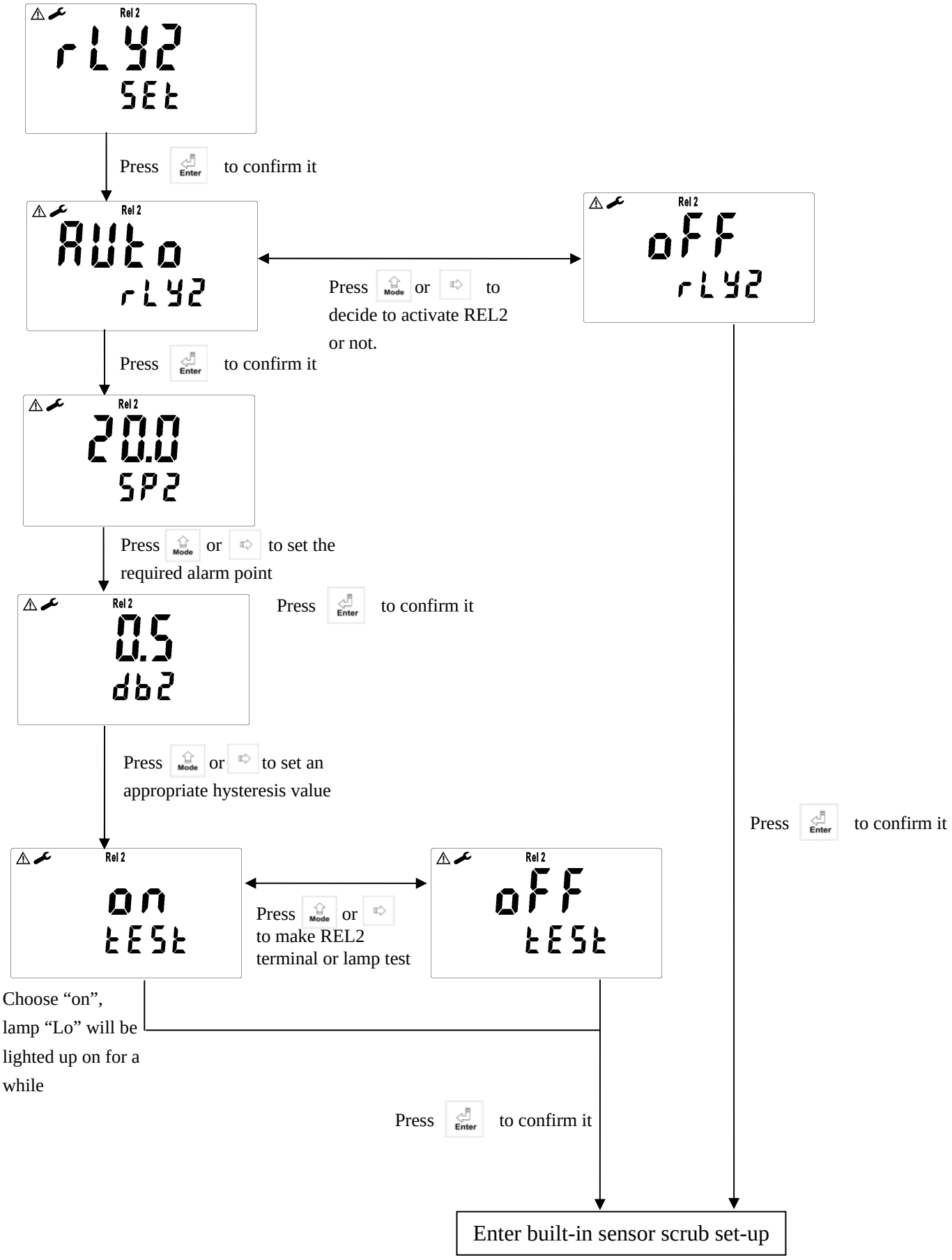

7.7 Automatic sensor scrub time interval set-up

Set time interval for built-in sensor scrub.

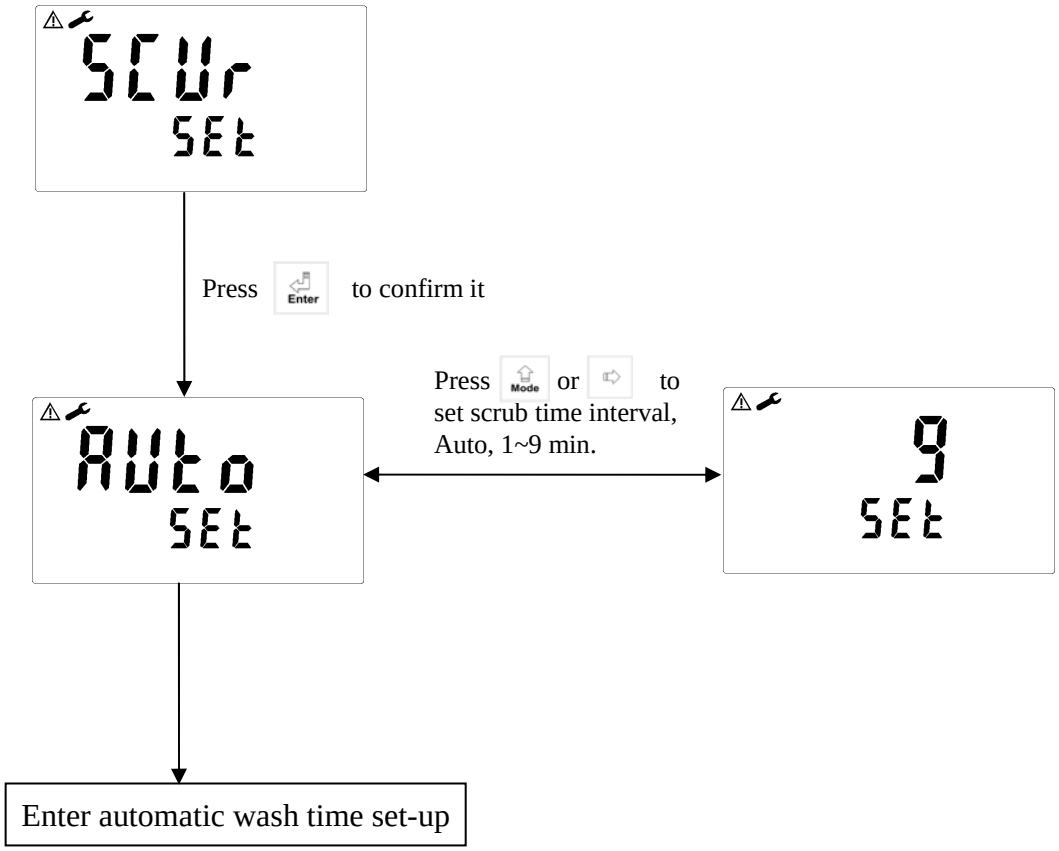

7.8 Wash time

Set the automatic starting time and turn-off time of the washing function. If any value is set to be 0, the instrument will automatically stop this function.

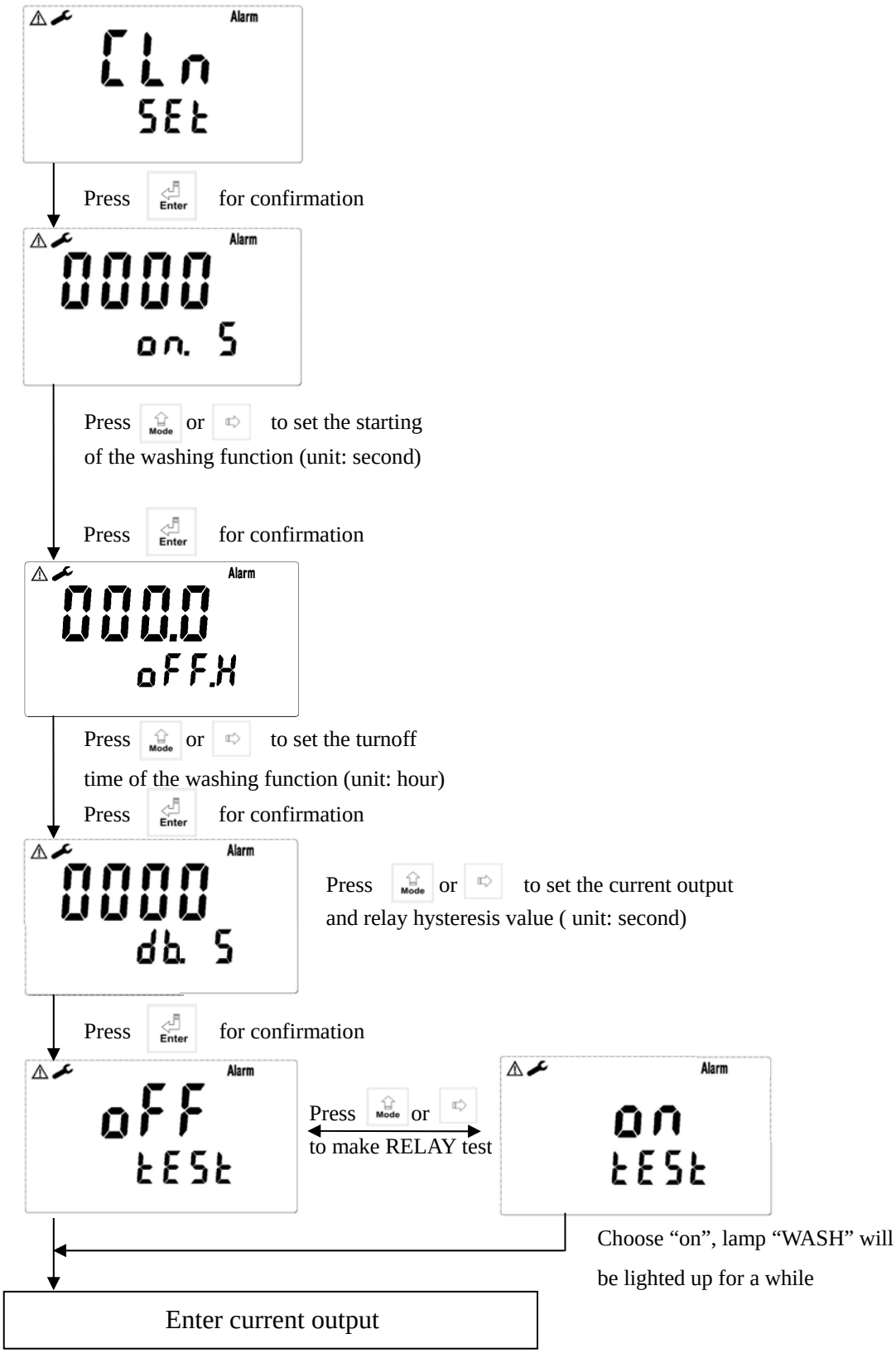

7.9 Analog output set-up (corresponding to turbidity/S.S.)

You can adjust the relative range of the turbidity/S.S. measurement with the output current according to actual situation in order to improve the resolution of current output.

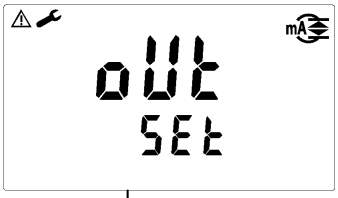

Note: When measuring range setup is set as "AUTO", the adjustment of the corresponding value is to adjust every digit and then to adjust the position of decimal. For example, if you need to set the value 10.00, you may set each digit to let it shows"1000", and then move the decimal to the proper position to make it shows as "10.00". When the sign ⚠ twinkles, it means that the fifth digit can be set.

Press Enter for confirmation

Press Mode or ⇨ to select current output mode 0-20 or 4-20 mA

Press Enter for confirmation

Press Enter for confirmation

Press Enter for confirmation

Press Enter for confirmation

Press Mode or ⇨ to set the relative upper limit of measurement value of 20mA

Press Enter for confirmation

Press Mode or ⇨ to make stimulation test for a current output of 0/4 and 20mA

Press Enter for confirmation

Enter "signal average time" set-up"

7.10 Average signal transmission time set-up

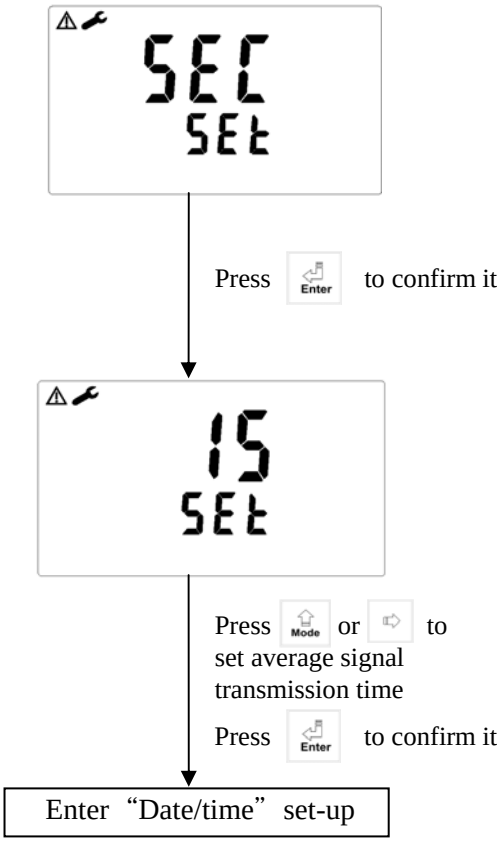

Note: The setting in 7.11 and 7.12 is for model TC-7100RS only.

7.11 Date/time set-up

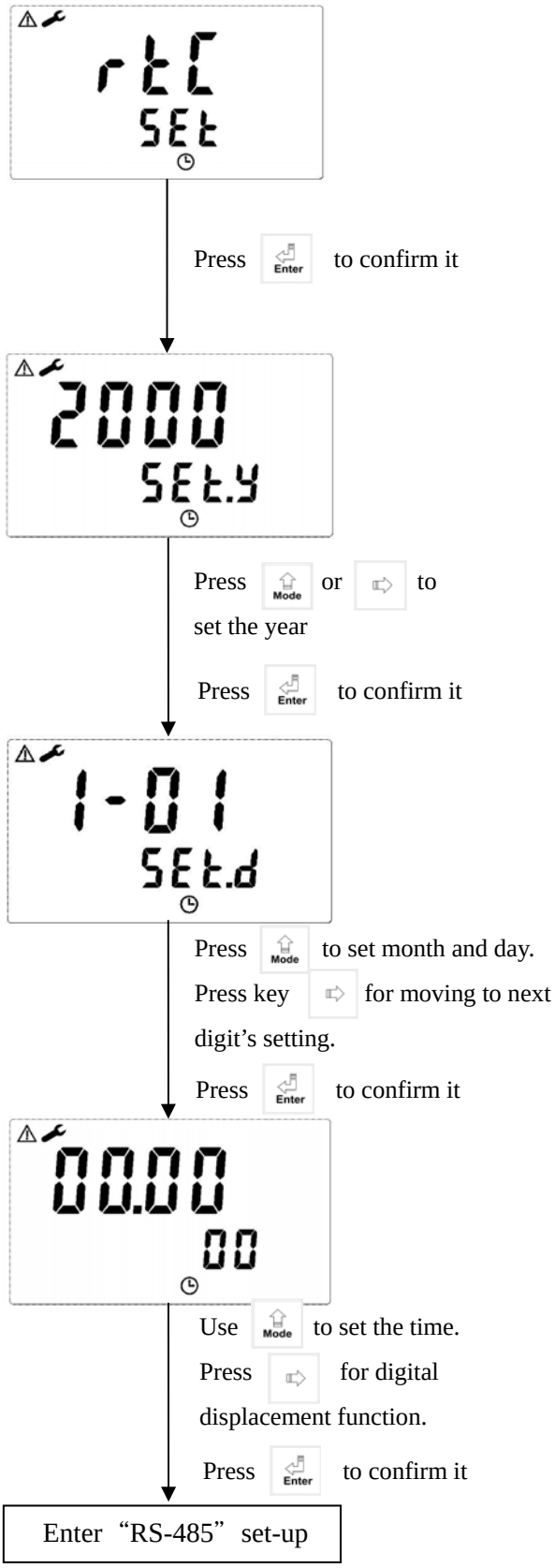

7.12 RS-485 set-up

If necessary, the user can set the ID and transmission speed of the series output interface.

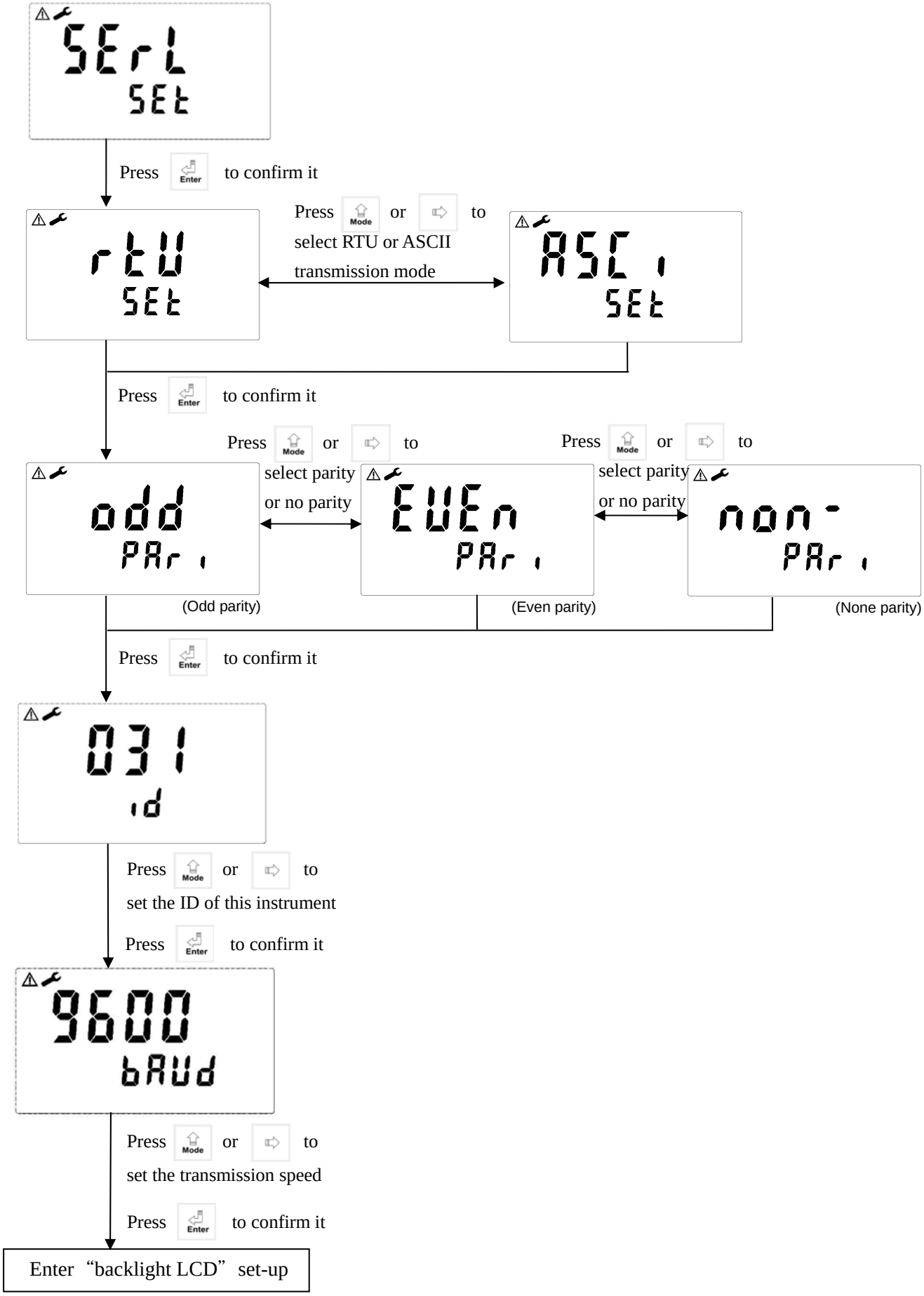

7.13 Backlight settings

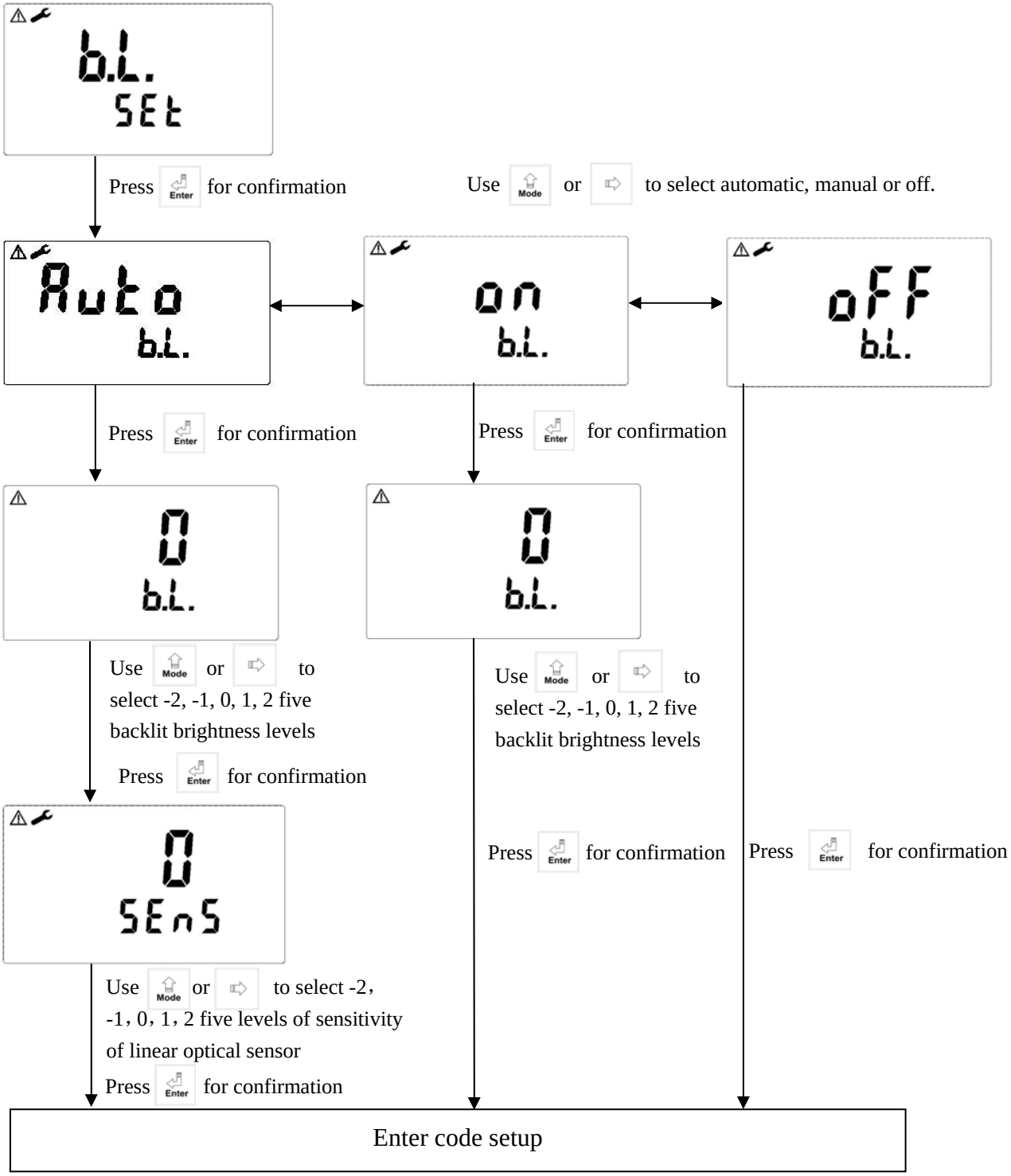

8.Calibration

Block diagram of Calibration

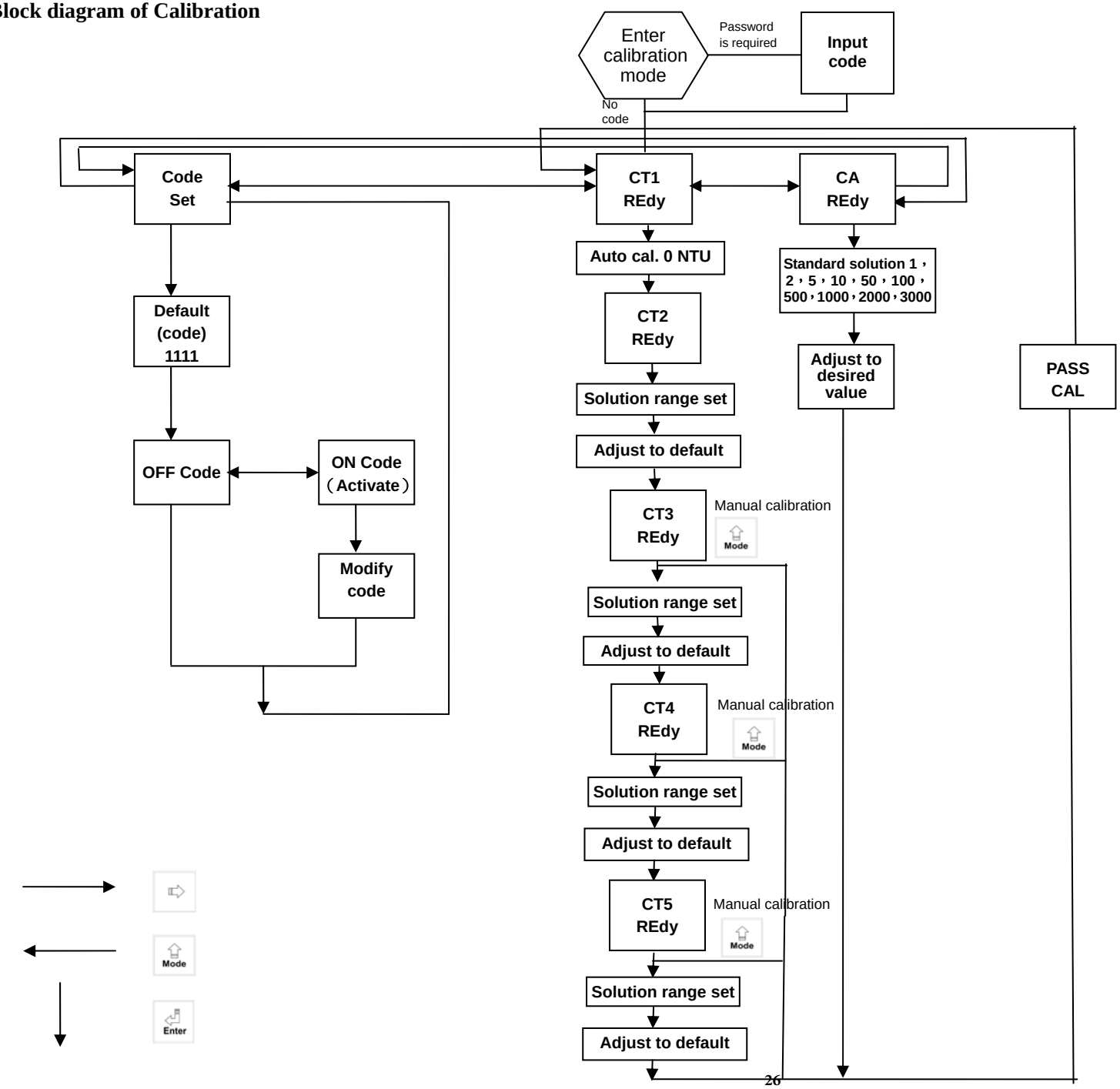

8.1 Security code of calibration

8.1.1 Code authorization: There is a two level password protection design. The code authorization of parameter setting is prior to the code authorization of calibration setting. Therefore, you can unlock the calibration with your “parameter set-up” password, or directly with your calibration set-up password.

8.1.2 Code set: In the pH measurement mode, press Cal. + Mode simultaneously to access the OS value (by pressing Enter) and slope value (by pressing Enter) of previous calibration, and then use Mode or ⇨ to enter the code set page.

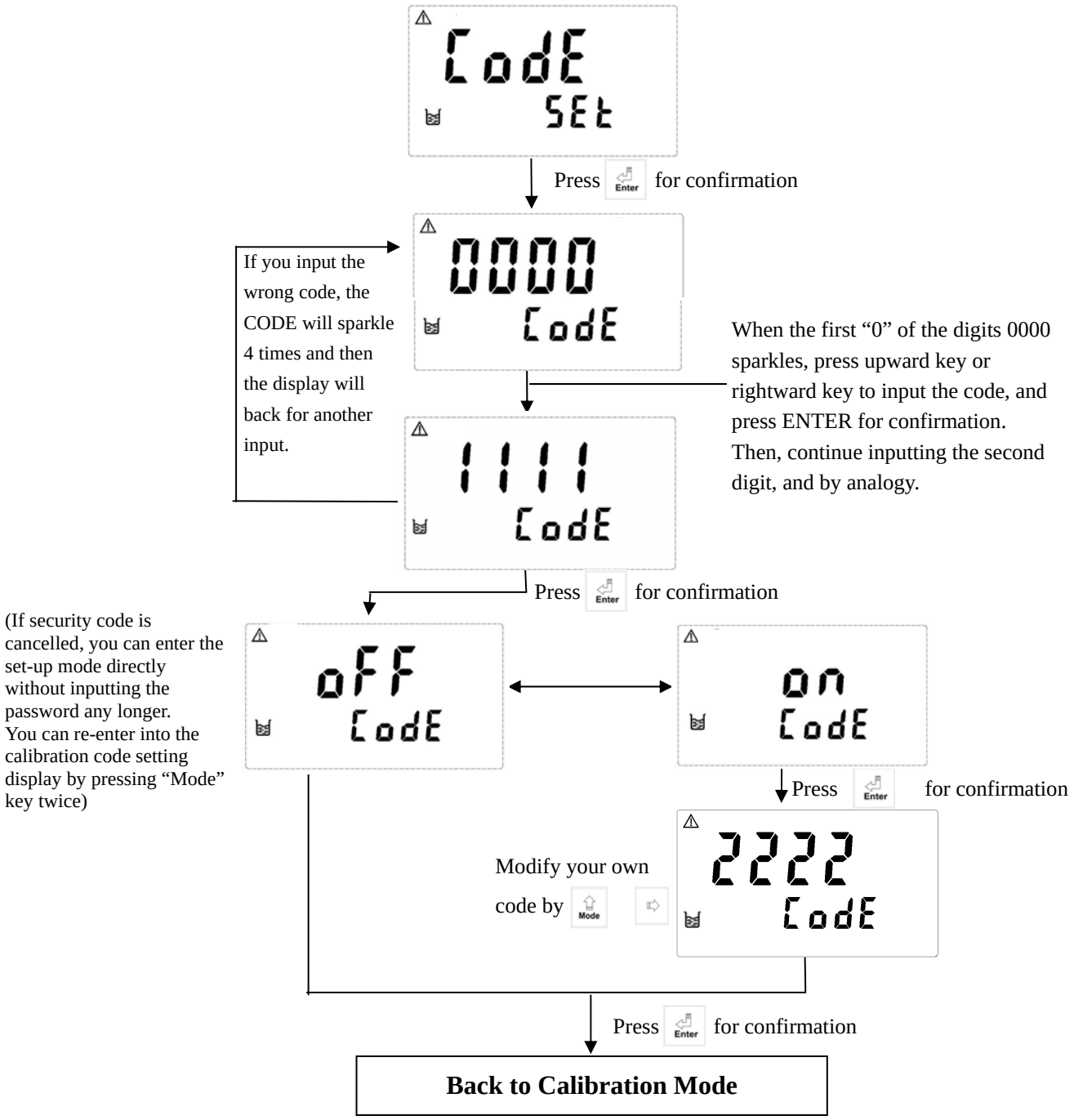

8.2 Turbidity standard solution calibration--CT

Note: “Ct 1” must be 0 NTU standard solution calibration.

Recommendation: Do not calibrate the value over 80% of measurement full scale.

8.2.1 Enter CT1 Calbration mode. After cleaning up the sensor, inmmerse the sensor into 0.00 NTU standard solutioin. Press Enter to confirm it. The display shows “0.00NTU”. Continually press Enter to send the calibration signal to sensor.

8.2.2 At the time, the sensor responses 2 mA analog signal to indicate that the sensor is in the process of inner calibration.

8.2.3 After inner calibration of the sensor, it responses 4 mA analog signal to transmitter. Press Enter to calibrate the sensor with the 0.00 NTU standard solution.

8.2.4 Enter analog signal display. Wait until the signal becomes stable, then press Enter to start the calibration.

8.2.5 The display shows Ct2 for entering the second point calibration. Clean the sensor before immersing it into well-prepared standard solution. Constantly stir the solution. Press Enter to confirm it. Enter turbidity range selection.

8.2.6 Enter turbidity range selection, press Mode or ⇨ to select suitable range. Press Enter and the value starts to twinkle. Press Mode or ⇨ to adjust value until it is the same with the standard solution’s value. Press Enter to display the analog signal of the sensor.

8.2.7 Enter analog signal display. Wait until the signal becomes stable, then press Enter to start the calibration.

8.2.8 The display shows it when calibration.

8.2.9 The display shows Ct3 for entering the third point calibration.

Note: To finish the calibration procedure as a two point calibration, when the display shows Ct3 please press .

8.2.10 Enter turbidity range selection, press or to select suitable range. Press and the value starts to twinkle. Press or to adjust value until it is the same with the standard solution's value. Press to display the analog signal of the sensor.

8.2.11 Enter analog signal display. Wait until the signal becomes stable, then press to start the calibration.

8.2.12 The display shows it when calibration.

8.2.13 The display shows Ct4 for entering the forth point calibration.

Note: To finish the calibration procedure as a three point calibration, when the display shows Ct4 please press .

8.2.14 Enter turbidity range selection, press or to select suitable range. Press and the value starts to twinkle. Press or to adjust value until it is the same with the standard solution's value. Press to display the analog signal of the sensor.

8.2.15 Enter analog signal display. Wait until the signal becomes stable, then press to start the calibration.

8.2.16 The display shows it when calibration.

8.2.17 The display shows Ct5 for entering the fifth point calibration.

Note: To finish the calibration procedure as a four point calibration, when the display shows Ct5 please press .

8.2.18 Enter turbidity range selection, press Mode or ⇨ to select suitable range. Press Enter and the value starts to twinkle. Press Mode or ⇨ to adjust value until it is the same with the standard solution's value. Press Enter to display the analog signal of the sensor.

8.2.19 Enter analog signal display. Wait until the signal becomes stable, then press Enter to start the calibration.

8.2.20 The display shows it when calibration.

8.2.21 When the calibration is successful, the display screen shows the word "CAL PASS"; when the calibration is unsuccessful, the display screen shows the word "CAL Err". (Please refer to chapter 10 for error message, causes and treatment seeking.)

8.3 Offset calibration--CA

Note: Before the implementation of offset calibration, it is necessary to make a 2 to 5 points standard solution calibration in advance.

8.3.1 After entering into display CA, put the sensor which has been cleaned into turbidity standard solution, and constantly stir the solution. Press Enter to confirm it and enter into turbidity range selection.

8.3.2 Enter turbidity range selection and press Mode or ⇨ to select suitable range. Press Enter . At the time, the display value starts to twinkle, then press Enter to enter analog signal display.

8.3.3 Enter analog signal display. Wait until the display value becomes stable. Press Enter to starts calibration.

8.3.4 The display shows it when calibration.

8.3.5 When the calibration is successful, the display screen shows the word "CAL PASS"; when the calibration is unsuccessful, the display screen shows the word "CAL Err". (Please refer to chapter 10 for error message, causes and treatment seeking.)

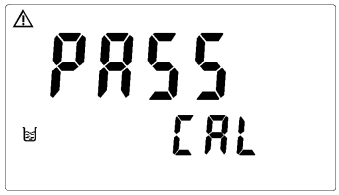

9. RS-485 (for TC-7100RS only)

The RS-485 transmission applies standard MODBUS protocol.

Factory default：

The ID of the instrument is “247”. The baud rate is “9600”.
The transmission encoding mode is “RTU”, “Non-Parity”.

9.1 RS-485 wiring diagram: ＜IMPORTANT！＞

No mater applying series connection to how many transmitters, the last transmitter should install a termination resistor. (If applying only one transmitter in the RS-485 system, the transmitter also needs to install a termination resistor.) Thus, it needs to connect with a 100Ω termination resistor between pin D+ and D-.

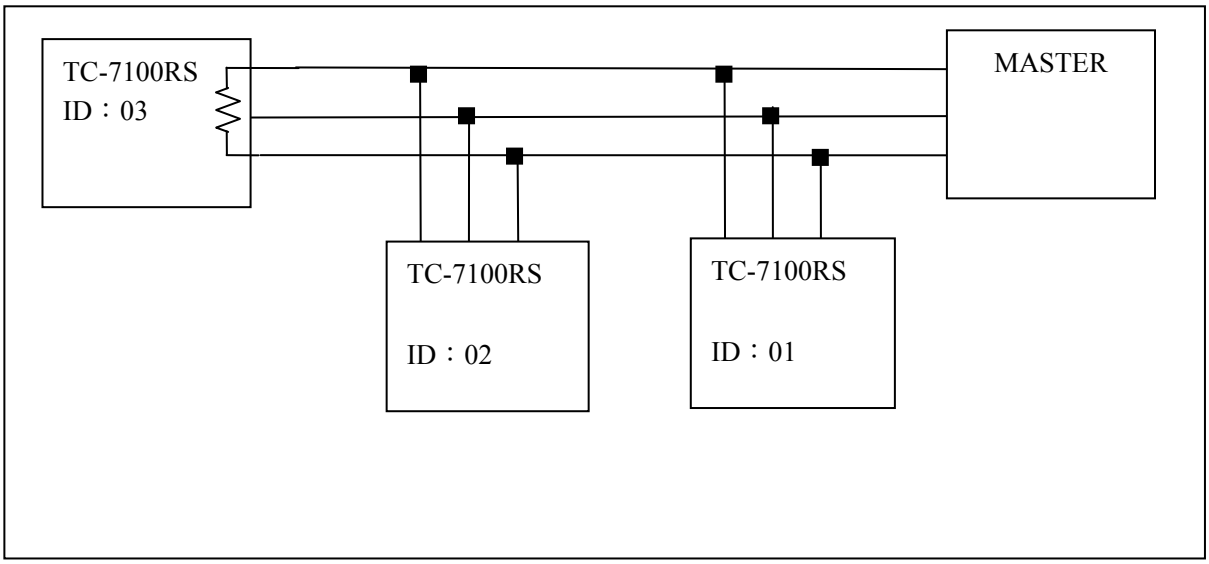

10. Error messages (Error code)

Messages	Reason	Dispositions
Err2	SLOPE value exceeds the upper or lower limit	Please check whether standard solution is repeated when calibration
Err3 ntU	The readout is unstable when calibration	Please check whether there is air bubble in/on the sensor lens. Make maintenance of sensor, or replace the sensor and then make another calibration.
Err4	Sensor failure	Replace with new sensor and make another calibration
Err6	Missed sensor or sensor failure	Please check whether the sensor has been connected with the instrument, or if it needs to change a new sensor. Make another calibration.
Err9	Serious error that does not permit any further measuring	Please call service engineer

11. Maintenance

Generally speaking, under normal operation, the transmitter produced by our company needs no maintenance except regular cleaning and calibration of the sensor to ensure accurate and stable measurement and system operation. In addition, please refer to the operation manual of the sensor to maintain the best performance of the sensor.