Air velocity, Air flow, RS232 Computer Interface

HOT WIRE ANEMOMETER

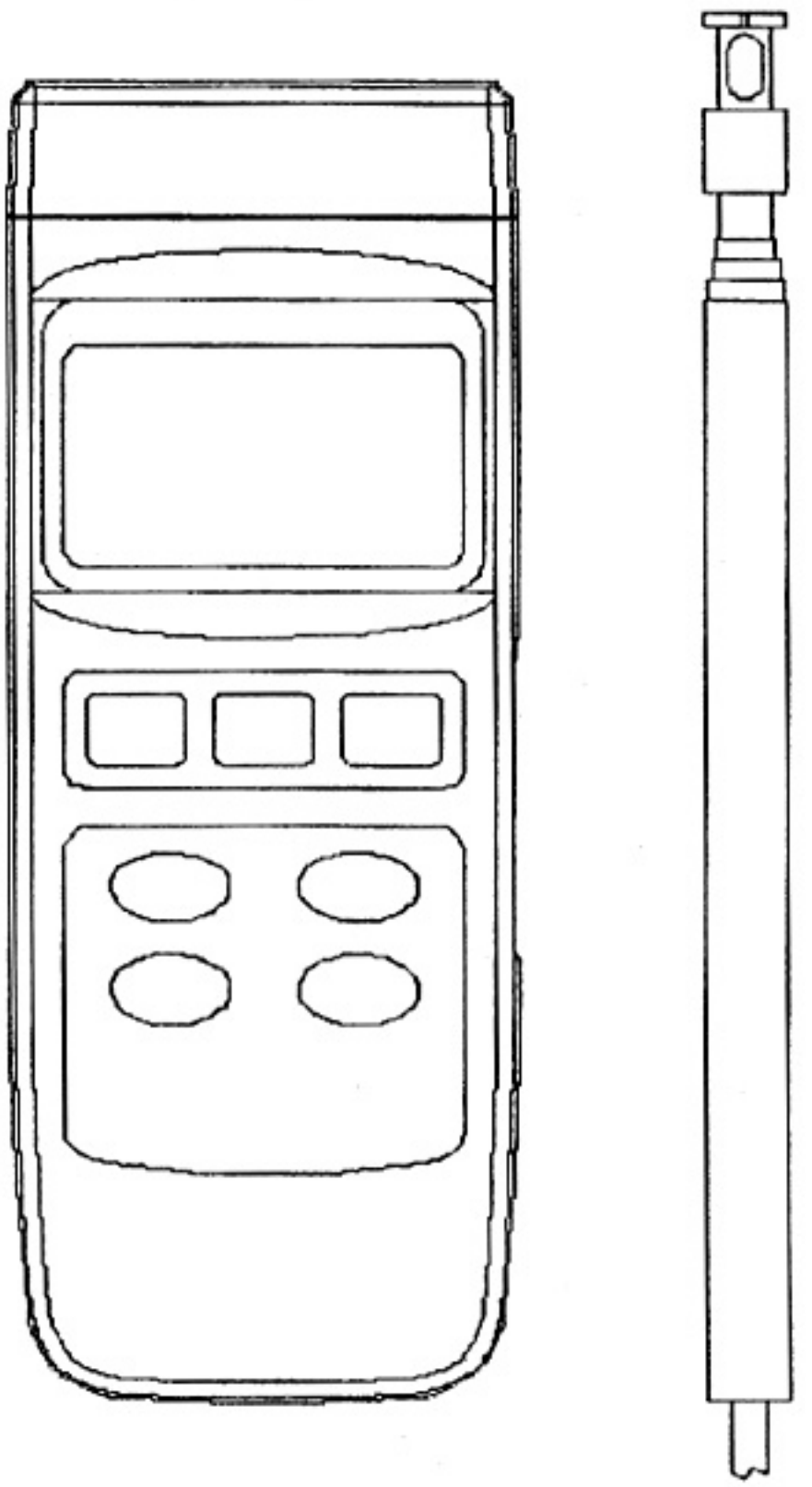

TABLE OF CONTENTS

1. FEATURES

* Combination of hot wire and standard thermistor, deliver rapid and precise measurements even at low air velocity value.
* Slim probe, ideal for grilles & diffusers.
* Air velocity : m/S, Ft/min, Km/h, Knot, Mile/h,
* Air flow : CMM (m^3/min.) and CFM (ft^3/min.).
* Air temperature (℃, ℉)
* Can default auto power off or manual power off.
* Can default the Temperature unit to ℃ or ℉.
* Air flow measurement can set the area dimension value.
* Zero adjustmnet.
* Large LCD with multiple display.
* Data hold, record max. and min. reading.
* Microcomputer circuit provides special function & offer high accuracy.
* Air Temp. used thermistor sensor, fast response time.
* Power by UM3 (1.5 V) x 4 batteries or DC 9V adapter.
* RS232 PC serial interface.
* Separate probe, easy for remote measurement.
* Applications : Environmental testing, Air conveyors, Flow hoods, Clean rooms, Air velocity, Air balancing, Fans/motors/blowers, Furnace velocity, Refrigerated case, Paint spray booths.

2. SPECIFICATIONS

2-1 General Specifications

Circuit	Custom one-chip of microprocessor LSI circuit.
Display	LCD size : 58 mm x 34 mm.
Measurement Unit	*Air velocity:* m/S (meters per second) Km/h (kilometers per hour) Ft/min (feet per minute) Knot (nautical miles per hour) Mile/h (miles per hour)
	Air flow: CMM (m^3/min., cube meter per min.) CFM (m^3/min., cube feet per min.)
	Air temperature: ℃, ℉
Sensor Structure	*Air velocity & Air flow :* Tiny glass bead thermistor.
	Air temperature : Thermistor.
Data Hold	Freeze the display reading.
Memory Recall	Maximum & Minimum value.
Sampling Time of display	Approx. 1 second.

Power off	Auto shut off saves battery life or manual off by push button.
Data Output	RS 232 PC serial interface.
Operating Temperature	0 to 50 ℃.
Operating Humidity	Less than 80% R.H.
Power Supply	DC 1,5 V battery (UM3) x 4 PCs, (Heavy duty type).
	DC 9V adapter input. *@ AC/DC power adapter is optional.*
Power Current	Approx. DC 70 mA *@ Main instrument. + Hot wire probe.*
Weight	515 g/ 1.13 LB. *@ Battery is included.*
Dimension	*Main instrument :* 203 x 76 x 38 mm *Telescope Probe :* Round, 12 mm Dia x 280 mm (min. length). Round, 12 mm Dia x 940 mm (max. length).
Accessories Included	Instruction manual.....1 PC Telescope Probe..... 1 PC Carrying case..... 1 PC
Optional Accessories	AC to DC 9V adapter. RS232 cable, UPCB-02. Data Acquisition software, SW-801-WIN.

2-2 Electrical Specifications (23± 5 ℃)

Air velocity

Measurement	Range	Resolution	Accuracy
m/S	0.2 to 20.0 m/s	0.1 m/S	± (5% + a) reading or ± (1% + a) full scale
Km/h	0.7-72.0 km/h	0.1 Km/h	
Mile/h	0.5-44.7 mph	0.1 Mile/h	
Knot	0.4-38.8 knot	0.1 Knot	
Ft/min	40-3940 ft/min	1 Ft/min	
@ a = 0.1 m/s, 0.3 km/h, 0.2 mile/h, 0.2 knot, 20 ft/min			

Note:

m/s - meters per second
ft/min - feet per minute
mile/h - miles per hour
km/h - kilometers per hour
knot - nautical miles per hour (international knot)

Air flow

Measurement	Range	Resolution	Area Range
CMM (m^3/min.)	0-36,000 m^3/min.	0.001 to 1	0.001 to 30.0 m^2.
CFM (ft^3/min.).	0-1,271,200 ft^3/min.	0.01 to 100	0.01 to 322.91 ft^2.

Air temperature

Measuring Range	0 ℃ to 50 ℃/32 ℉ to 122 ℉
Resolution	0.1 ℃/0.1 ℉
Accuracy	± 0.8 ℃/1.5 ℉

3. FRONT PANEL DESCRIPTION

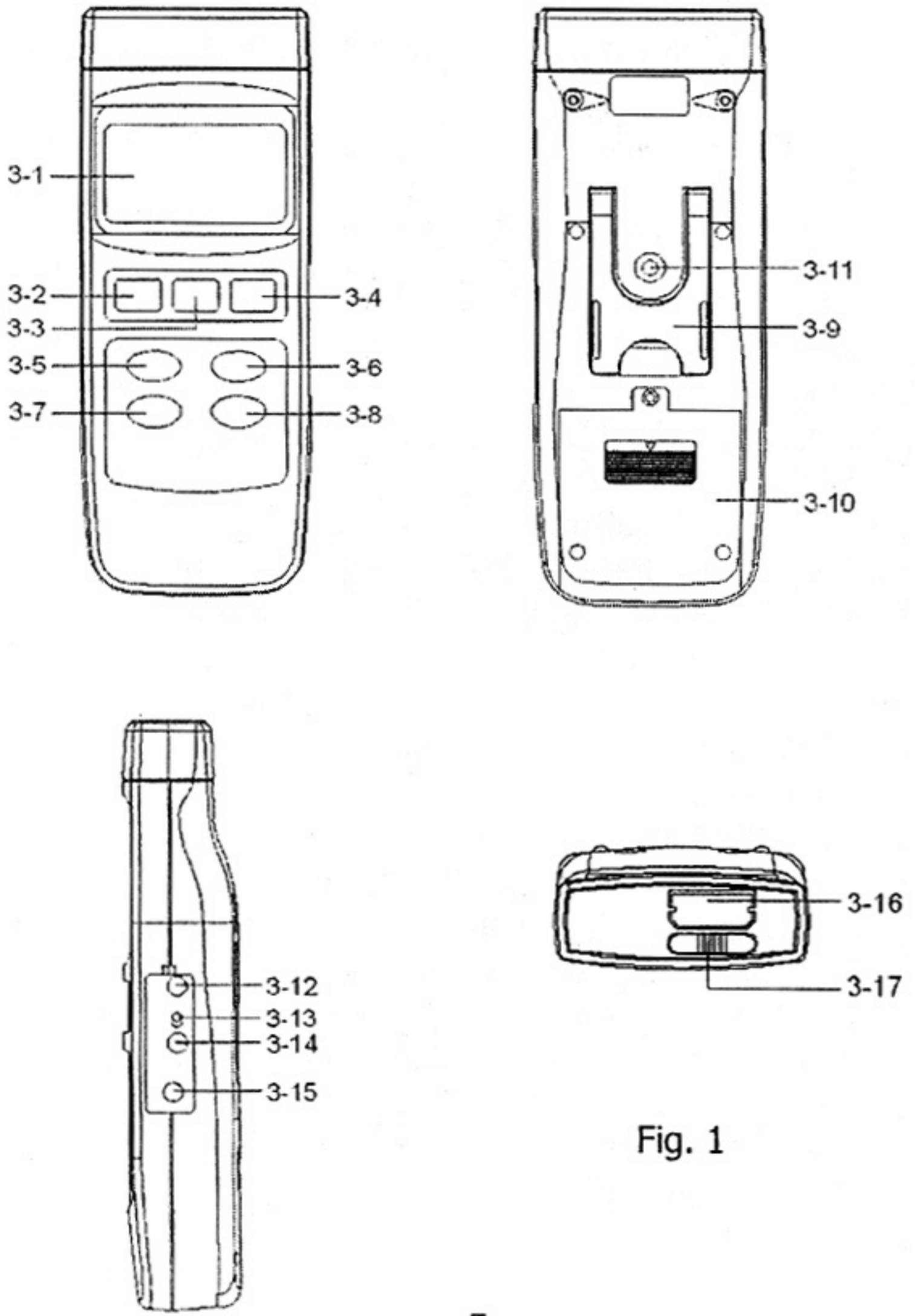

Fig. 1

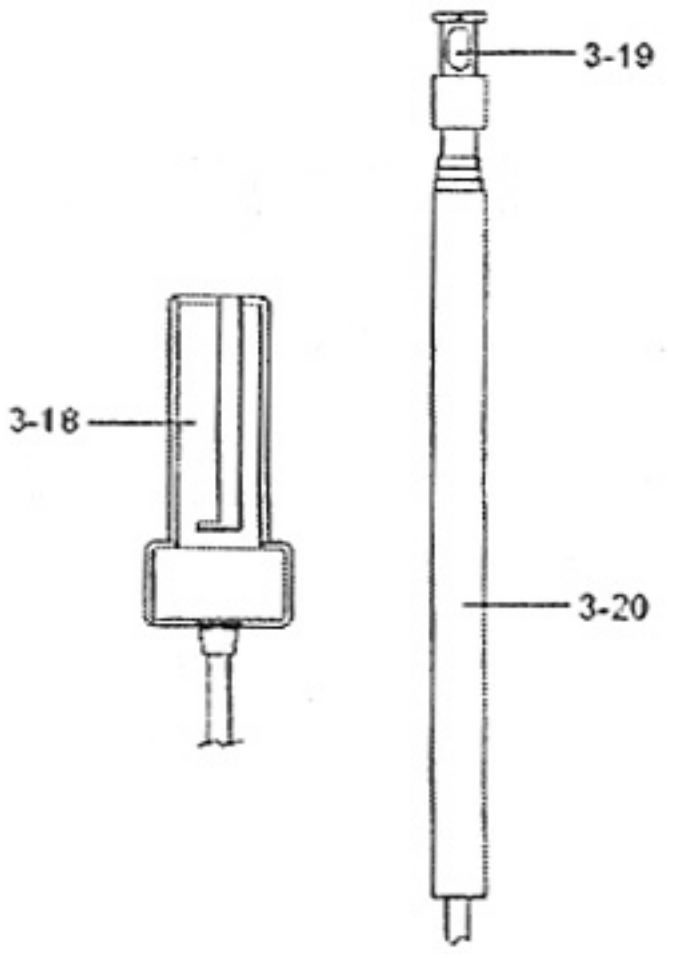

Fig. 1

3-1 Display
3-2 Power Button
3-3 HOLD Button (ESC Button)
3-4 REC Button (Enter Button)
3-5 UNIT/ZERO Button (▲ Up Button)
3-6 Function Button (▼ Down Button)
3-7 AVG START CLEAR Button (▶ Button)
3-8 AREA, SET Button
3-9 Stand
3-10 Battery Compartment/Cover
3-11 Tripod Fix Nut
3-12 LCD Brightness Adjust VR
3-13 System Reset Switch
3-14 RS-232 Output Terminal
3-15 DC 9V Power Adapter Input Socket
3-16 Probe Input Socket
3-17 Probe Lock Switch (System On/Off Switch)
3-18 Probe Plug
3-19 Sensing Head
3-20 Telescope Probe

4. GENERAL MEASURING PROCEDURE

4-1 Air velocity /Air Temp. measurement

1) Important information of using the Telescope Probe

* When the probe is not used, the " Sensor cover " should slide to the up position.

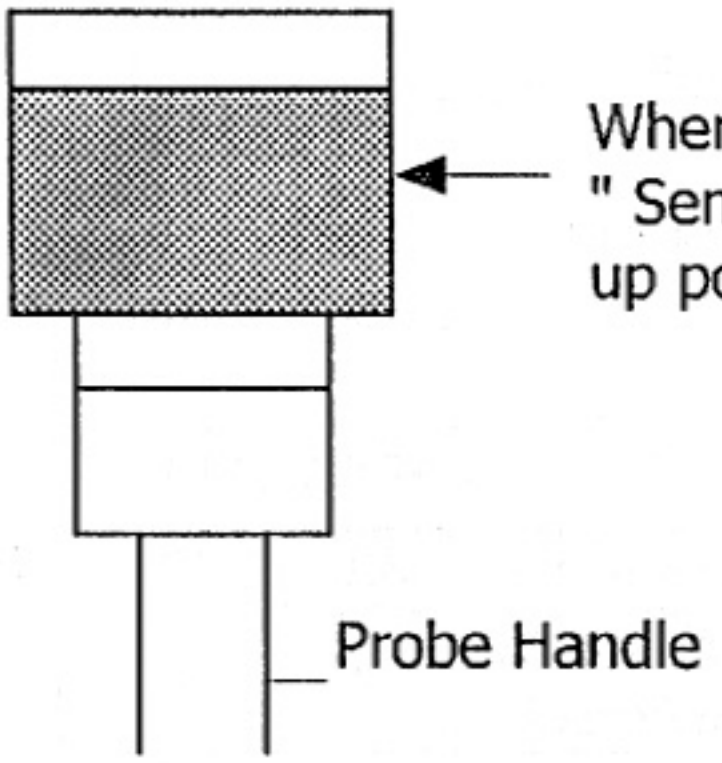

Fig. 2

* When begin to use the probe,
  a. Slide the sensor cover to the down position, let the air velocity sensor to contact the air, refer Fig. 3.
  b. Extent the telescope probe to the convenient length ,refer Fig. 3

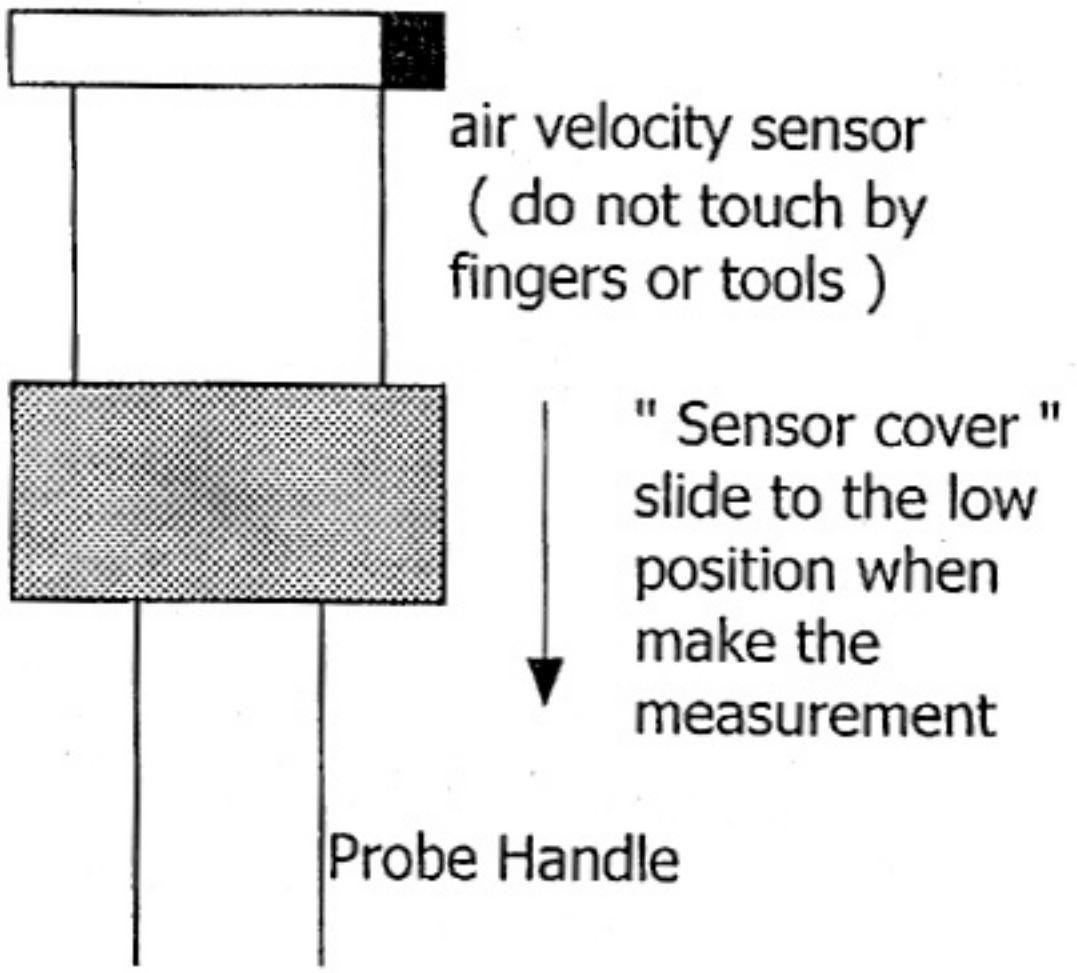

Fig. 3

* Do not use the fingers or any tools to touch the air velocity sensor, otherwise the meter may happen the permanent damage without warranty.

* Direction of the sensor head : There is a mark on the top of the " Sensor Head ", When make the measurement, then this mark should against the measured wind, refer Fig. 4.

When sensor head face against the measurement air, then the upper display will show the air velocity value. The lower display will show the temperature value.

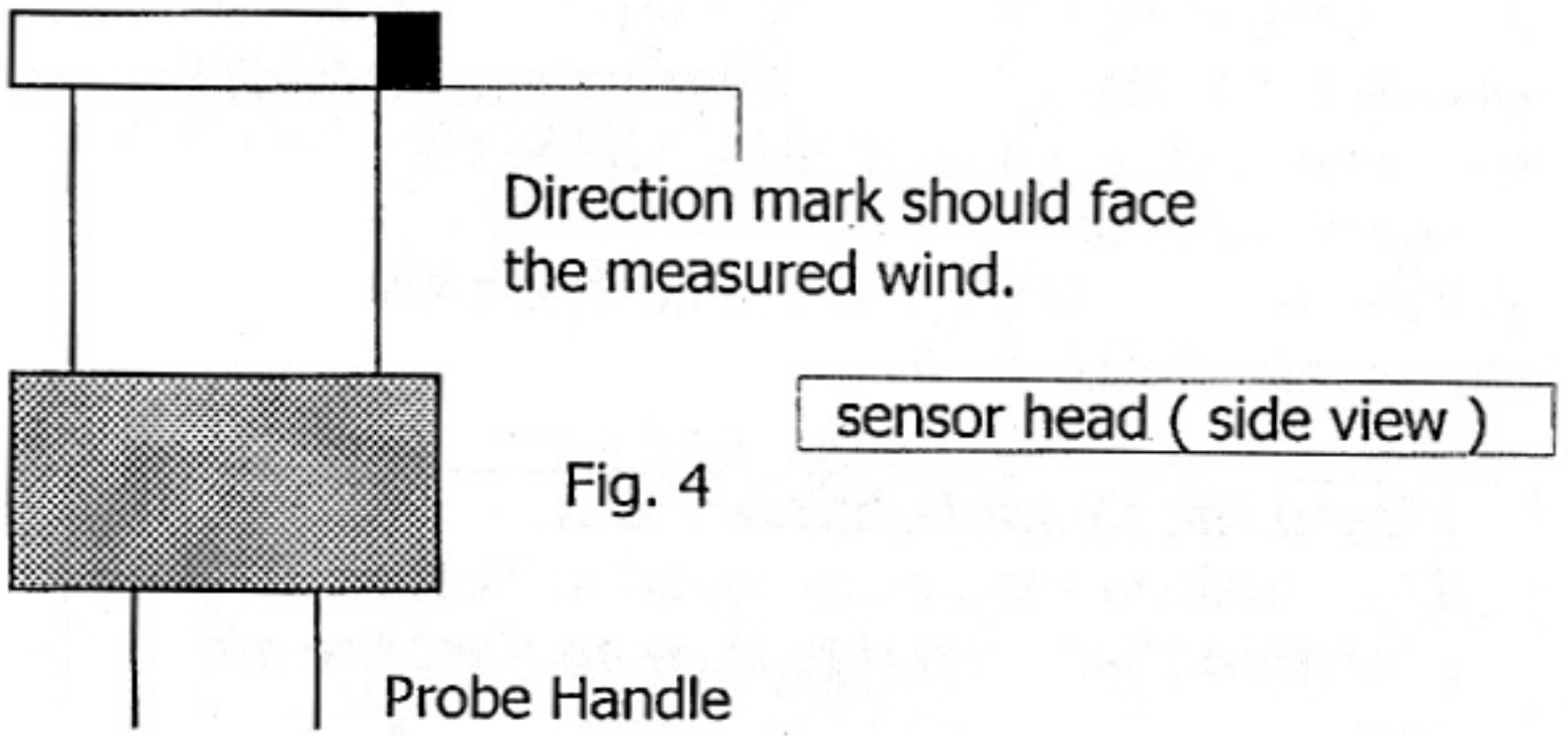

Fig. 4

2) Install the " Probe Plug " (3-18, Fig. 1) into the " Probe Input Socket " (3-16, Fig. 1).

> ***Attention :***
> ***After install the " Probe Plug ", should slide Probe Lock Switch " (3-17, Fig. 1) to the On position (right position).***

3) Power on the meter by pressing the " Power Button " (3-2, Fig. 1).
4) Pressing " Function Button " (3-6, Fig. 1) once until the display show the air velocity unit (m/S, Ft/min, Km/h, Knot or Mile/h).
5) The air velocity unit (m/S, Ft/min, Km/h, Knots or Mile/h) can be selected by pressing the " UNIT Button " (3-5, Fig. 1).

6) Hold the " Probe Handle " (3-20, fig. 1) by hand & let the " Sensor Head's mark " (3-19, Fig. 1) face against the measuring air flow source, then the Display (3-1, Fig. 1) will show air velocity directly. At the same time, the display will show the air temperature value.
@ The Temp. units (℃, ℉) adjustment procedures, please refer Chapter 5-2.

Measuring Consideration :
The mark on the sensor head indicates the direction that " need to face against the air flow.

4-2 Air flow measurement

A. Air flow (CMM, CFM) measurement

1) Install the " Probe Plug " (3-18, Fig. 1) into the " Probe Input Socket " (3-16, Fig. 1).

Attention :
After install the " Probe Plug ", should slide Probe Lock Switch " (3-17, Fig. 1) to the On position (right position)

2) Power on the meter by pressing the " Power Button " (3-2, Fig. 1).

3) Pressing " Function Button " (3-6, Fig. 1) once until the display show the air flow unit (CMM or CFM).
   @ Air flow measurement, the display unit will show CMM (or CFM).
   @ CMM : cube meter per minute.
   CFM : cube feet per minute.
   @ The display of CMM measurement is :

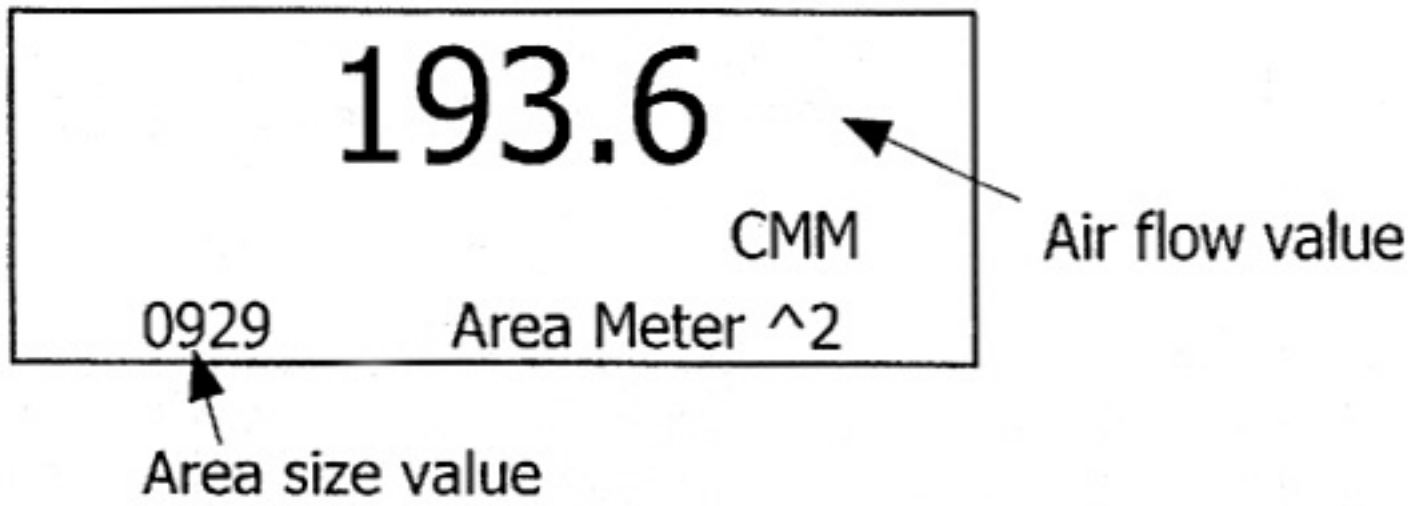

4) The air flow unit (CMM, CFM) can be selected by pressing the " UNIT Button " (3-5, Fig. 1).
5) The bottom display will show area size in Meter^2 (or Ft^2).
   @ Meter^2 : Meter square, Ft^2 : Feet square.
6) Hold the " Telescope Probe " (3-20, fig. 1) by hand & let the " Sensing Head " (3-19, Fig. 1) to face against the measuring air flow source, then the Display (3-1, Fig. 1) will show air flow value.

Sensor head direction :
The mark on the sensor head indicates the direction that " need to face against the air flow.

B. Air flow area size Setting

1) Under the air flow function (CMM, CFM), press the " AREA Button " (3-8, Fig. 1) once will into the area size setting, the display will show :

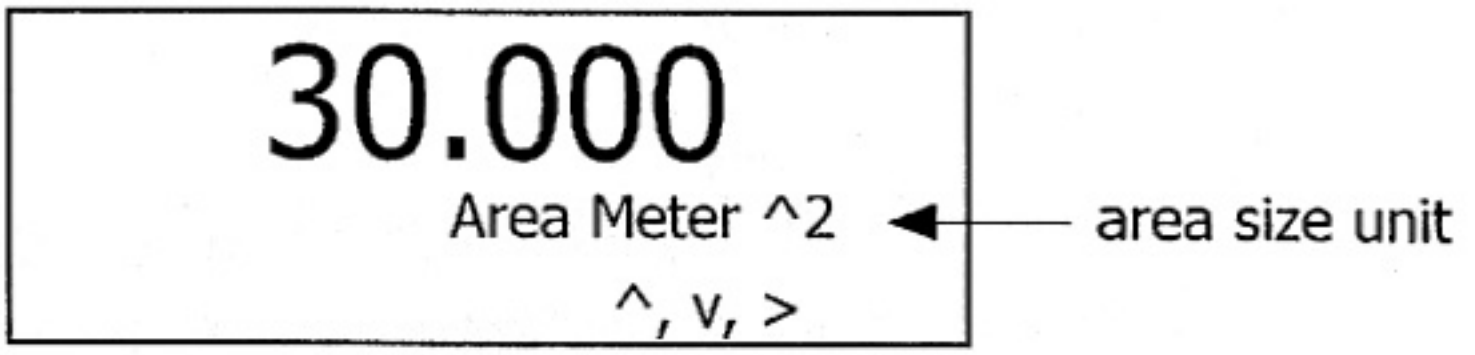

@ If the air flow unit is set to CMM, the area size unit will be " Meter square " (Meter ^ 2).
@ If the air flow unit is set to CFM, then area size unit will be " Feet square " (Feet ^ 2).

2) Use ▲ Up Button, ▼ Down Button and the → Button to select the desired area value.
@ If the air flow unit is CMM, the area range adjustment value is limited to 0.001 to 30.000 Meter square.
@ If the air flow unit is CFM, the area range adjustment value is limited to 0.01 to 322.92 Feet square.

3) After finish the Area Size adjustment, push the " Enter Button " first, then press the " ESC Button " again will quite and return to the normal measurement display.

C. Average Air flow measurement

1) Pressing " Function Button " (3-6, Fig. 1) once until the bottom display show " AVG ", " CMM (or CFM) "

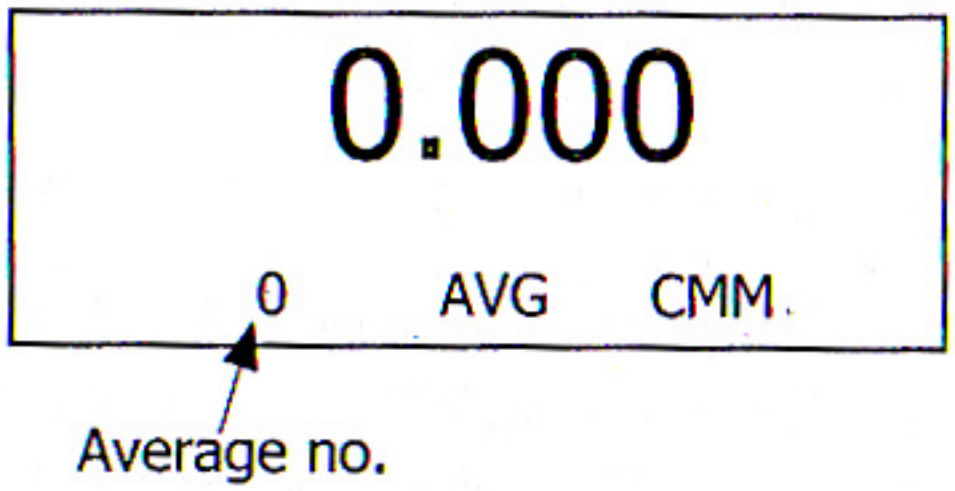

The " Average Air Flow measurement " can make the average calculation of " Air Flow value " up to max. 20 records by pressing the " AVG START " button manually. The formula of " Average Air Flow " measurement is listed as below:

$$\frac{\text{1st Record} + \text{2nd Record} \ldots\ldots\ldots + \text{Nth Record}}{N}$$

2) **For example :**

a. The Air Flow value is 1250 CMM, then press the AVG START CLEAR " Button (3-7, Fig. 1) the bottom left display will show " 1 ", the main display will show 1250.

b. Next time, if the Air Flow value is 1380 CMM, then press the AVG START CLEAR " Button (3-7, Fig. 1) the bottom left display will show " 2 ", the main display will show 1315 .

@ 1315 = (1250+1380)/2

c..Next time, if the Air Flow value is 1105 CMM, then press the AVG START CLEAR " Button (3-7, Fig. 1) the bottom left display will show " 3 ", the main display will show 1245.

@ 1245 = (1250+1380+1105)/3

3) **Average No. Clear**

Press the " AVG START CLEAR " Button (3-7, Fig. 1) continuously at least 2 seconds will clear both of " Average No. " and the " " Main display " value to zero.

4-3 Zero adjustment

When slide the sensor cover of " Sensing Head " (3-19, Fig. 1) to the up position to let the air velocity sensor isolated from the environment (refer Fig. 2), if the meter not show zero value. It can make the zero adjustment according the following procedures :

1) Pressing " Function Button " (3-6, Fig. 1) once until the display show the air velocity unit (m/S, Ft/min, Km/h, Knots or Mile/h).
2) Push the " Zero Button " (3-5, Fig. 1) 2 seconds continuously at least to let the reading value of air velocity show zero value.

4-4 Data Hold

During the measurement, press the " Hold Button " (3-3, Fig. 1) once will hold the measured value & the LCD will display a " HOLD " symbol.

* Press the " Hold Button " once again will release the data hold function.

4-5 Data Record (Max., Min. reading)

* The data record function records the maximum and minimum readings. Press the " REC Button " (3-4, Fig. 1) once to start the Data Record function and there will be a " REC. " symbol on the display.
* With the " REC. " symbol on the display :

a) Press the " REC Button " (3-4, Fig. 1) once, the " REC. MAX. " symbol along with the maximum value will appear on the display.
If intend to delete the maximum value, just press the " Hold Button " (3-3, Fig. 1) once, then the display will show the " REC. " symbol only & execute the memory function continuously.

b) Press the " REC Button " (3-4, Fig. 1) again, the REC. MIN. " symbol along with the minimum value will appear on the display.
If intend to delete the minimum value, just press the " Hold Button " (3-3, Fig. 1) once, then the display will show the " REC. " symbol only & execute the memory function continuously.

c) To exit the memory record function, just press the " REC " button for 2 seconds at least. The display will revert to the current reading.

5. ADVANCED ADJUSTMENT PROCEDURES

When execute the following Advanced Adjustment Procedures should cancel the " Hold function " and the " Record function " first. The display should not show the " HOLD " and the " REC " marker.

a. Press the " SET Button " (3-8, Fig. 1) at least two seconds until the lower display show

1
Auto Power Off
1:On 0:Off

If push the " ESC Button " (3-3, Fig. 1) will escape the selecting function and return to the normal measuring display.

b. One by one to press the " Set Button " (3-8, Fig. 1) once a while to select the three main function, at the same time lower display will show on the lower display will show on the lower display as :

Auto Power Off
Temp. Unit
ESC→Finish

c. When make Advanced Adjustment Procedure will use the following key buttons :

ESC Button (3-3, Fig. 1), Enter Button (3-4, Fig. 1)
▲ Up Button (3-5, Fig. 1), ▼ Down Button (3-6, Fig. 1)
SET Button (3-8, Fig. 1), ▶ Button (3-7, Fig. 1)

5-1 Auto Power Off Default Setting

* Use ▲ Up Button, ▼ Down Button to select " 1 " or " 0 ".

1 = Auto power On.
0 = Auto power Off.

* After finish the Auto Power Off adjustment, push the " Enter Button " , then press the " ESC Button " will quite and return to the normal measurement display.

5-2 Temp. Unit Default Setting

* Use ▲ Up Button, ▼ Down Button to select " 1 " or " 0 ".

1 = ℉
0 = ℃

* After finish the Temperature unit adjustment, push the " Enter Button " , then press the " ESC Button " will quite and return to the normal measurement display.

5-3 Escape from the SETTING function

Press the " ESC Button " once a while will quite and return to the normal measurement display.

6. RS232 PC SERIAL INTERFACE

The instrument has RS232 PC serial interface via a 3.5 mm terminal (3-14, Fig. 1).

The data output is a 16 digit stream which can be utilized for user's specific application.

A RS232 lead with the following connection will be required to link the instrument with the PC serial port.

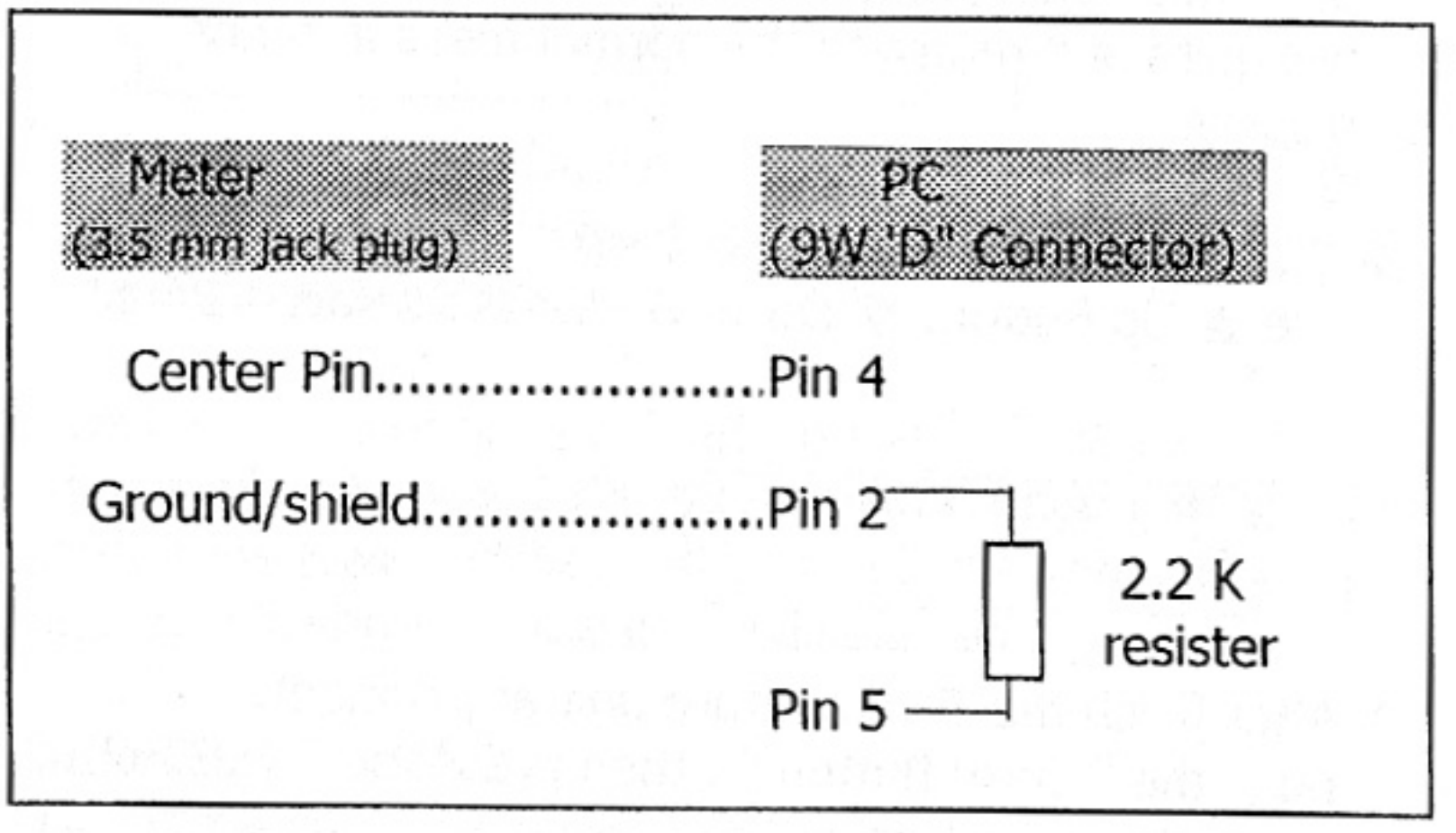

The 16 digits data stream will be displayed in the following format :

D15 D14 D13 D12 D11 D10 D9 D8 D7 D6 D5 D4 D3 D2 D1 D0

Each digit indicates the following status :

D0	End Word = 0D		
D1 & D8	Display reading, D1 = LSD, D8 = MSD For example : If the display reading is 1234, then D8 to D1 is : 00001234		
D9	Decimal Point(DP), position from right to the left 0 = No DP, 1= 1 DP, 2 = 2 DP, 3 = 3 DP		
D10	Polarity 0 = Positive 1 = Negative		
D11 & D12	Annunciator for Display		
	℃ = 01	Knot = 09	mile/h = 12
	℉ = 02	Km/h = 10	CMM = 84
	m/S = 08	ft/min = 11	CFM = 85
D13	When send the upper display data = 1 When send the lower display data = 2		
D14	4		
D15	Start Word = 02		

RS232 setting

Baud rate	9600
Parity	No parity
Data bit no.	8 Data bits
Stop bit	1 Stop bit

The 16 digits data stream will be displayed in the following format :

D15 D14 D13 D12 D11 D10 D9 D8 D7 D6 D5 D4 D3 D2 D1 D0

Each digit indicates the following status :

D0	End Word = 0D		
D1 & D8	Display reading, D1 = LSD, D8 = MSD For example : If the display reading is 1234, then D8 to D1 is : 00001234		
D9	Decimal Point(DP), position from right to the left 0 = No DP, 1= 1 DP, 2 = 2 DP, 3 = 3 DP		
D10	Polarity 0 = Positive 1 = Negative		
D11 & D12	Annunciator for Display		
	℃ = 01	Knot = 09	mile/h = 12
	℉ = 02	Km/h = 10	CMM = 84
	m/S = 08	ft/min = 11	CFM = 85
D13	When send the upper display data = 1 When send the lower display data = 2		
D14	4		
D15	Start Word = 02		

RS232 setting

Baud rate	9600
Parity	No parity
Data bit no.	8 Data bits
Stop bit	1 Stop bit

7. BATTERY REPLACEMENT

1) When the left corner of LCD display show " ", it is necessary to replace the batteries (UM3/1.5 V x 4 PCs).
2) Slide the " Battery Cover " (3-10, Fig. 1) away from the instrument and remove the battery.
3) Replace with batteries (UM3/1.5 V x 4 PCs and reinstate the cover.
4) Make sure the battery cover is secured after changing the battery.

8. SYSTEM RESET

If the meter happen the troubles such as :

CPU system is hold (for example, the key button can not be operated...).

Then make the system RESET will fix the problem.
The system RESET procedures will be either following method :

1) **Slide the " Probe Lock Switch/System On/Off Switch " from the On to Off, then On again.**
2) **Or during the Power On, used a pin tool to push the " System Reset Switch " (3-13, Fig. 1) once a while.**

9. OPTIONAL ACCESSORIES

RS232 cable UPCB-02	* Isolated RS232 cable. * Used to connect the meter to the computer
Data Acquisition software SW-801-WIN	* The SW-U801-WIN is a multi displays (1/2/4/6/8 displays) powerful application software, provides the functions of data logging system, text display, angular display, chart display, data recorder high/low limit, data query, text report, chart report.. .xxx.mdb data file can be retrieved for EXCEL, ACESS.., wide intelligent applications.